Pressurized Payloads Interface Requirements Document

International Space Station Program

July 21, 1999

Revision D

Type 1 Approved by NASA

esa
european space agency

National Aeronautics and Space Administration
International Space Station Program
Johnson Space Center
Houston, Texas
Contract No. NAS15–10000 (DR PA06)

REVISION AND HISTORY PAGE

REV.	DESCRIPTION	PUB. DATE
Initial	Initial Release per DR PA06	07–25–97
A	Revision A (Reference per SSCD 000887, EFF. 11/12/97). Revision A incorporates the following PIRNs: 57000–NA–0008B, 57000–NA–0011B, 57000–NA–0018A, 57000–NA–0019B, 57000–NA–0021A, 57000–NA–0027A, 57000–NA–0028A, 57000–NA–0030A, 57000–NA–0032, 57000–NA–0033, 57000–NA–0034A, 57000–NA–0035, 57000–NA–0036, 57000–NA–0038A, 57000–NA–0040A, 57000–NA–0044A	02–18–98
B	Revision B (Reference per SSCD 001168, EFF. 9/14/98) Revision B incorporates the following PIRNs: 57000–NA–0007C, 57000–NA–0009D, 57000–NA–0010B, 57000–NA–0012C, 57000–NA–0013B, 57000–NA–0014C, 57000–NA–0015C, 57000–NA–0016B, 57000–NA–0017C, 57000–NA–0020A, 57000–NA–0022C, 57000–NA–0024D, 57000–NA–0026B, 57000–NA–0029E, 57000–NA–0031B, 57000–NA–0039C, 57000–NA–0041C, 57000–NA–0042A, 57000–NA–0043A, 57000–NA–0045B, 57000–NA–0047, 57000–NA–0048, 57000–NA–0049A, 57000–NA–0050A, 57000–NA–0051A, 57000–NA–0052A, 57000–NA–0053A, 57000–NA–0054B, 57000–NA–0055, 57000–NA–0056, 57000–NA–0057C, 57000–NA–0058, 57000–NA–0059, 57000–NA–0060A, 57000–NA–0061, 57000–NA–0062, 57000–NA–0063B, 57000–NA–0064B, 57000–NA–0065, 57000–NA–0066B, 57000–NA–0067, 57000–NA–0068B, 57000–NA–0069A, 57000–NA–0070A, 57000–NA–0071A, 57000–NA–0072A, 57000–NA–0073A, 57000–NA–0074A, 57000–NA–0075, 57000–NA–0076B, 57000–NA–0077, 57000–NA–0078A, 57000–NA–0079A, 57000–NA–0080A, 57000–NA–0081A, 57000–NA–0082A, 57000–NA–0083A, 57000–NA–0084, 57000–NA–0085A, 57000–NA–0087, 57000–NA–0088A, 57000–NA–0089A, 57000–NA–0090, 57000–NA–0091A, 57000–NA–0092A, 57000–NA–0093A, 57000–NA–0096A, 57000–NA–0097, 57000–NA–0098A, 57000–NA–0099A, 57000–NA–0100B, 57000–NA–0101C, 57000–NA–0102, 57000–NA–0103B, 57000–NA–0104C, 57000–NA–0105, 57000–NA–0106C, 57000–NA–0107A, 57000–NA–0108	11/4/98
C	Revision C (Reference per SSCD 001822, EFF. 4/28/99). Revision C incorporates the following PIRNs: 57000–NA–0109B, 57000–NA–0111A, 57000–NA–0112A, 57000–NA–0113, 57000–NA–114D, 57000–NA–0115A, 57000–NA–0116C, 57000–NA–0117A, 57000–NA–0119B, 57000–NA–0120, 57000–NA–0121B, 57000–NA–122D, 57000–NA–0123A, 57000–NA–0126C, 57000–NA–0127B, 57000–NA–0128A, 57000–NA–0129A, 57000–NA–0130, 57000–NA–0131A, 57000–NA–0133A, 57000–NA–0135H, 57000–NA–136C, 57000–NA–0137	4/28/99

REVISION AND HISTORY PAGE

REV.	DESCRIPTION	PUB. DATE
D	Revision D (Reference per SSCD 002533, EFF.). Revision D incorporates the following PIRNs: 57000–NA–0132C, 57000–NA–0139B, 57000–NA–0140A, 57000–NA–141, 57000–NA–0143A, 57000–NA–0146A, 57000–NA–0147A, 57000–NA–149, 57000–NA–0150C, 57000–NA–0152A, 57000–NA–0153, 57000–NA–154, 57000–NA–0155, 57000–NA–0156A, 57000–NA–0157A, 57000–NA–0158, 57000–NA–0159, 57000–NA–0160, 57000–NA–0162, 57000–NA–0163A, 57000–NA–164B, 57000–NA–0165A, 57000–NA–0166B, 57000–NA–0167, 57000–NA–0168B, 57000–NA–0170, 57000–NA–0174A, 57000–NA–0177A	7/21/99

INTERNATIONAL SPACE STATION PROGRAM

PRESSURIZED PAYLOADS INTERFACE REQUIREMENTS DOCUMENT

JULY 21, 1999

PREFACE

This document defines the minimum Space Station Requirements for Pressurized Payloads and provides requirements for incorporation in the National Aeronautics and Space Administration (NASA) Space Station hardware procurements and technical programs. The traceability of these requirements into International Partners pressurized payload requirement documents would ensure certification for integration into ISS modules (i.e., USL, APM, JEM, MPLM, and CAM). The Space Station Pressurized Payloads Interface Requirements document contains an introduction, a list of applicable documents, subsections on general and detailed interface and payload specific design requirements, subsections on verification requirements, along with appendices containing acronyms, and definitions. This document defines and controls required interfaces for compatibility with the International Space Station (ISS). The applicability of these requirements will depend upon the characteristics of the integrated rack payloads as specified in the individual Payload Integration Agreement (PIA). The interface design requirements outlined in this document are mandatory and may not be violated unless specifically agreed upon in the individual Interface Control Document (ICD). Space Station Pressurized Payloads Interface Requirements will be implemented on all NASA rack level payload provider contractual and internal activities and will be included in any existing contracts through contract changes. This document is under the control of the ISS multilateral Payloads Implementation Control Board (MPICB), and any changes or revisions will be approved by the MPICB.

APPROVED BY: _____

Mike Suffredini
Manager, Payloads Office, NASA ISSP
Chairman, MPICB

APPROVED BY: _____

Frank Longhurst
Head, Manned Spaceflight Department
European Space Agency, ESTEC (MSM–E)
Partner Member, MPICB

INTERNATIONAL SPACE STATION PROGRAM

PRESSURIZED PAYLOADS INTERFACE REQUIREMENTS DOCUMENT

JULY 21, 1999

CONCURRENCE

PREPARED BY:	Wade Geiger	Boeing/TBE
	PRINT NAME	ORGN
	SIGNATURE	DATE
CHECKED BY:	Michael A. Soutullo	Boeing/TBE
	PRINT NAME	ORGN
	SIGNATURE	DATE
SUPERVISED BY (BOEING):	Mo Saiidi	Boeing
	PRINT NAME	ORGN
	SIGNATURE	DATE
SUPERVISED BY (NASA):	Michael Horkachuck	NASA/OZ3
	PRINT NAME	ORGN
	SIGNATURE	DATE
DQA:	David Henderson	Boeing
	PRINT NAME	ORGN
	SIGNATURE	DATE

INTERNATIONAL SPACE STATION PROGRAM
PRESSURIZED PAYLOADS INTERFACE REQUIREMENTS DOCUMENT

LIST OF CHANGES

JULY 21, 1999

All changes to paragraphs, tables, and figures in this document are shown below:

SSCBD	ENTRY DATE	CHANGE	PARAGRAPH(S)
000887	12–NOV–97	57000–NA–0001B	4.3.5.1.9
		57000–NA–0002A	3.5.1.2B
		57000–NA–0003B	2.1
		57000–NA–0028A	2.1
		57000–NA–0004B	PREFACE
		57000–NA–0006B	3.1.1.2B
		57000–NA–0008B	3.2.1.4
		57000–NA–0011B	4.3.2.1.4
		57000–NA–0018A	3.2.1
		57000–NA–0019B	3.2.4.3
		57000–NA–0027A	3.2.3.1
		57000–NA–0032	3.5.1.11
		57000–NA–0033	3.10.3.2
		57000–NA–0034A	3.1.2.5
		57000–NA–0035	3.7.6
		57000–NA–0036	3.12.2.2
		57000–NA–0038A	3.12.4.3.9
		57000–NA–0040A	3.10.2.1.2, 3.12.1, 3.12.7.5, 3.12.7.5.1, 4.3.12.7.5, 4.3.12.7.5.1
			TABLE(S)
		57000–NA–0030A	3.9.3.4–1
		57000–NA–0044A	3.1.1.3–1
			FIGURE(S)
		57000–NA–0021A	3.2.2.9–1

SSCBD	ENTRY DATE	CHANGE	PARAGRAPH(S)
001168	23–APR–98	57000–NA–0007C	Appendix B 2.1 3.12.3.4 4.3.12.3.4
			TABLE(S)
			3.12.3.4–1 4.3.12.3.4–1
			PARAGRAPH(S)
		57000–NA–0009D	3.2.2.8
			FIGURE(S)
			3.2.2.8–1
			PARAGRAPH(S)
		57000–NA–0010B	3.2.2.10
		57000–NA–0012C	4.3.2.2.3
		57000–NA–0013B	4.3.2.2.9
		57000–NA–0014C	4.3.2.5.3
		57000–NA–0015C	4.3.2.5.4
		57000–NA–0016B	4.3.2.5.5
		57000–NA–0017C	3.2.2.6.1.1
			FIGURE(S)
		57000–NA–0020A	3.2.1.3.3–1
			PARAGRAPH(S)
		57000–NA–0022C	3.2.5.6, 4.3.2.5.6, 3.2.6, 4.3.2.6, 3.2.6.1, 4.3.2.6.1, 3.2.6.2, 4.3.2.6.2, 3.2.6.2.1, 4.3.2.6.2.1 3.2.6.2.2, 4.3.2.6.2.2, 3.2.6.2.3, 4.3.2.6.2.3, 3.2.6.2.4, 4.3.2.6.2.4, 3.2.6.2.5, 4.3.2.6.2.5, 3.2.6.3, 4.3.2.6.3, 3.2.6.4, 4.3.2.6.4, 3.2.6.4.1, 4.3.2.6.4.1, 3.2.6.5, 4.3.2.6.5
			TABLE(S)
			3.2.6.2.4–1

SSCBD	ENTRY DATE	CHANGE	PARAGRAPH(S)
		57000–NA–0024D	4.3.2.2.8
			FIGURE(S)
			4.3.2.2.8–1
			PARAGRAPH(S)
		57000–NA–0026B	4.3.2.2.10
		57000–NA–0029E	3.1.1.6, 4.3.1.1.6, 3.1.1.4, 4.3.1.1.4, 3.2.2.1, 4.3.2.2.1, 3.3.5.2.1.2, 4.3.3.5.2.1.2, 3.3.5.2.1.3, 4.3.3.5.2.1.3, 3.3.6.1.4, 4.3.3.6.1.4, 3.3.6.1.4.1, 4.3.3.6.1.4.1, 3.3.6.1.4.2, 4.3.3.6.1.4.2, 3.3.6.1.4.4, 4.3.3.6.1.4.4, 3.3.7.6, 4.3.3.7.6, 3.3.7.7, 4.3.3.7.7, 3.3.9, 3.3.10.3, 4.3.3.10.3, 3.4.1.2.6, 4.3.4.1.2.6, 3.4.1.2.7, 4.3.4.1.2.7, 3.4.1.3.2, 4.3.4.1.3.2, 3.4.1.4, 4.3.4.1.4, 3.5.1.1, 4.3.5.1.1, 3.6.1.1, 4.3.6.1.1, 3.6.2.1, 4.3.6.2.1, 3.7.1.5, 4.3.7.1.5, 3.7.2.5, 4.3.7.2.5, 3.7.2.5, 4.3.7.2.5, 3.7.4.5, 4.3.7.4.5, 3.8.1.1, 4.3.8.1.1
		57000–NA–0031B	3.2.4, 4.3.2.4
		57000–NA–0039C	3.12.6.4.1, 4.3.12.6.4.1
		57000–NA–0041C	3.12.5.2.1
		57000–NA–0042A	3.12.4.3.11, 4.3.12.4.3.11
		57000–NA–0043A	3.2.3.2
		57000–NA–0045B	3.5.1.2 3.5.1.14 3.5.1.16 3.5.1.17
		57000–NA–0047	3.5.1.15, 4.3.5.1.15

SSCBD	ENTRY DATE	CHANGE	PARAGRAPH(S)
		57000–NA–0048	3.1.2.5, 4.3.1.2.5 2.1
		57000–NA–0049A	3.10.3.1, 4.3.10.3.1
		57000–NA–0050A	3.12.7.5.13, 4.3.12.7.5.13
		57000–NA–0051A	3.5.1.11, 4.3.5.1.11
		57000–NA–0052A	3.5.1.9, 4.3.5.1.9, 3.5.1.14, 4.3.5.1.14
		57000–NA–0053A	3.3.2.3, 4.3.3.2.3 4.3.3.4.2.2
		57000–NA–0054B	2.1 3.1.1.4, 4.3.1.1.4
		57000–NA–0055	2.1 3.8.2
		57000–NA–0056	3.4.1.1 3.4.1.2.1 3.4.1.2.4
		57000–NA–0057C	3.5.1.6, 4.3.5.1.6
		57000–NA–0058	4.3.3.4.1, 4.3.3.4.1.1, 4.3.3.4.1.1.1, 4.3.3.4.1.1.2, 4.3.3.4.1.2, 4.3.3.4.1.3, 4.3.3.4.1.4, 4.3.3.5, 4.3.3.5.1.1, 4.3.3.5.1.2, 4.3.3.5.1.3, 4.3.3.5.1.4, 4.3.3.5.1.10
		57000–NA–0059	4.3.1.1.1
		57000–NA–0060A	3.12.6, 4.3.12.6
		57000–NA–0061	3.7.1.3, 3.7.2.3, 3.7.3.3, 3.7.4.3
		57000–NA–0062	3.12.3.3, 4.3.12.3.3 3.12.3.3.1, 4.3.12.3.3.1 3.12.3.3.1.1, 4.3.12.3.3.1.1 3.12.3.3.1.2, 4.3.12.3.3.1.2 3.12.3.3.1.3, 4.3.12.3.3.1.3 3.12.3.3.1.4, 4.3.12.3.3.1.4 3.12.3.3.2, 4.3.12.3.3.2 3.12.3.3.2.1, 4.3.12.3.3.2.1 3.12.3.3.2.2, 4.3.12.3.3.2.2 3.12.3.3.2.3, 4.3.12.3.3.2.3 3.12.3.3.3, 4.3.12.3.3.3

SSCBD	ENTRY DATE	CHANGE	PARAGRAPH(S)
		57000–NA–0062 (Continued)	3.12.3.3.4, 4.3.12.3.3.4 3.12.3.3.5, 4.3.12.3.3.5 Appendix B
			TABLE(S)
			3.12.3.3.2.1–1 3.12.3.3.2.2–1
			FIGURE(S)
			4.3.12.3.3.1–1
			PARAGRAPH(S)
		57000–NA–0063B	3.12.6.1, 4.3.12.6.1
		57000–NA–0064B	3.12.4.3.1, 4.3.12.4.3.1
		57000–NA–0065B	3.12.2.1, 4.3.12.2.1
		57000–NA–0066B	Appendix B, 3.10.2, 4.3.10.2, 3.10.2.1.1 3.10.2.2.1, 4.3.10.2.2.1, 3.10.2.2.2, 4.3.10.2.2.2, 3.10.2.2.2.1, 4.3.10.2.2.2.1 3.10.2.2.2.2, 4.3.10.2.2.2.2, 3.10.3, 4.3.10.3, 3.10.3.1, 4.3.10.3.1, 3.10.3.2, 4.3.10.3.2, 3.10.3.3, 4.3.10.3.3, 3.10.3.4, 4.3.10.3.4
			FIGURE(S)
			3.10.3.4–1
			FIGURE(S)
		57000–NA–0067	3.12.4.1.1–1 3.12.4.1.1–2 New
		57000–NA–0068B	4.3.12.9.1.4.1 4.3.12.9.1.4.3 4.3.12.9.1.4.4
		57000–NA–0069A	3.2.1.3.4, 4.3.2.1.3.4
		57000–NA–0070A	4.3.2.1.1.1 4.3.2.1.1.2
		57000–NA–0071A	4.3.2.1.2.1
		57000–NA–0072A	4.3.2.1.2.2

SSCBD	ENTRY DATE	CHANGE	PARAGRAPH(S)
		57000–NA–0073A	4.3.2.1.3.1 4.3.2.1.3.2
		57000–NA–0074A	4.3.2.1.3.3
		57000–NA–0075	3.2.2.3.2.1.2, 4.3.2.2.6.2.1.2
		57000–NA–0076B	3.2.2.9, 4.3.2.2.9
		57000–NA–0077	3.6.2.4, 4.3.6.2.4 4.3.6.1.5
		57000–NA–0078A	1.1, 2.1, 3.2.1.2.2, 3.2.3.3, 3.2.4.2, 3.2.4.5, 3.3.6.1.6.1, 3.3.6.1.6.2, 3.3.6.1.6.3, 3.6.1.5.3, 3.9.2.3, 3.9.3.1, 3.12.9.1.1, 3.12.9.2, 3.12.9.12, 4.3.2.3.3, 4.3.2.4.2, 4.3.2.4.5, 4.3.2.5.1.1, 4.3.2.5.1.2, 4.3.3.7.2.1, 4.3.3.7.3.1
		57000–NA–0079A	3.2.5.3, 4.3.2.5.3
		57000–NA–0080A	3.2.2.2, 4.3.2.2.2
		57000–NA–0081A	3.2.2.3
		57000–NA–0082A	3.12.9.1.2, 4.3.12.9.1.2 3.12.9.1.3, 4.3.12.9.1.3
		57000–NA–0083A	3.12.9.1.4.2, 4.3.12.9.1.4.2
			FIGURE(S)
		57000–NA–0084	3.9.3.4–4
			PARAGRAPH(S)
		57000–NA–0085A	3.2.2.6.1.1, 4.3.2.2.6.1.1
			FIGURE(S)
		57000–NA–0087	3.2.2.3–1
		57000–NA–0088	3.2.2.9–1
		57000–NA–0089A	3.12.3.4, 4.3.12.3.4, Appendix A
		57000–NA–0090	3.1.1.5, 4.3.1.1.5
		57000–NA–0091A	3.2.5.5, 4.3.2.5.5
		57000–NA–0092A	3.1.1.2, 4.3.1.1.2, 3.1.1.3, 4.3.1.1.3,
			TABLE(S)
			3.1.1.3–2, 3.1.1.3–3

SSCBD	ENTRY DATE	CHANGE	PARAGRAPH(S)
		57000–NA–0093A	3.3.5.1.3, 4.3.3.5.1.3
		57000–NA–0096A	3.9.3.2, 4.3.9.3.2
		57000–NA–0097	3.3.5.1.4.1, 3.3.5.1.4.1.1, 3.3.5.1.4.1.2, 3.3.5.1.4.1.3, 3.3.5.1.4.1.4, 4.3.3.5.1.4.1, 4.3.3.5.1.4.1.1, 4.3.3.5.1.4.1.2, 4.3.3.5.1.4.1.3, 4.3.3.5.1.4.1.4, Appendix B
		57000–NA–0098A	3.2.5.4, 4.3.2.5.4
			TABLE(S)
			3.2.5.4–1
			FIGURE(S)
		57000–NA–0099A	3.2.1.3.3–1
			PARAGRAPH(S)
		57000–NA–0100B	3.12.3.1.2, 4.3.12.3.1.2, 3.12.3.1.3, 4.3.12.3.1.3, 3.12.3.1.4, 4.3.12.3.1.4, 3.12.4.2.3, 4.3.12.4.2.3, 3.12.4.2.4, 4.3.12.4.2.4, 3.12.4.2.5.1, 4.3.12.4.2.5.1, 3.12.4.2.8.3, 4.3.12.4.2.8.3, 3.12.4.4.3, 4.3.12.4.4.3, 3.12.4.4.4, 4.3.12.4.4.4, 3.12.4.4.7, 4.3.12.4.4.7, 3.12.4.4.10, 4.3.12.4.4.10, 3.12.5.2.3, 4.3.12.5.2.3, 3.12.5.2.6, 4.3.12.5.2.6, 3.12.6.4.2, 4.3.12.6.4.2, 3.12.7.5.5, 4.3.12.7.5.5, 3.12.7.5.8, 4.3.12.7.5.8, 3.12.9.1.5, 4.3.12.9.1.5, 3.12.9.11, 4.3.12.9.11
			TABLE(S)
			3.12.6.4.2–1
			FIGURE(S)
			3.12.4.4.2–1, 3.12.6.4.2–1

SSCBD	ENTRY DATE	CHANGE	PARAGRAPH(S)
		57000–NA–0101C	4.3.1.1, 3.1.1.6.1, 4.3.8.1, 3.12.1, 4.3.12.1, 3.12.2.3, 4.3.12.2.3, 3.12.4.3.3, 4.3.12.4.3.3, 3.12.4.3.4, 4.3.12.4.3.4, 3.12.4.3.5, 4.3.12.4.3.5, 3.12.4.3.10, 4.3.12.4.3.10, 3.12.4.3.11, 4.3.12.4.3.11, 3.12.4.3.13, 4.3.12.4.3.13, 3.12.4.3.15, 4.3.12.4.3.15, 3.12.4.4.1, 4.3.12.4.4.1 3.12.4.4.5, 4.3.12.4.4.5, 3.12.4.4.11, 4.3.12.4.4.11, 3.12.4.4.12, 4.3.12.4.4.12, 3.12.5.2.1, 3.12.5.2.2, 4.3.12.5.2.2, 3.12.5.2.8, 4.3.12.5.2.8, 3.12.5.2.9, 4.3.12.5.2.9, 4.3.12.7, 4.3.12.7.1 3.12.7.5.3, 4.3.12.7.5.3, 3.12.7.5.6, 4.3.12.7.5.6, 3.12.7.5.7.1, 4.3.12.7.5.7.1, 3.12.7.5.9, 4.3.12.7.5.9, 3.12.7.5.10, 3.12.7.5.11, 4.3.12.7.5.11, 3.12.7.6, 4.3.12.7.6, 4.3.12.9.1.4, 3.12.9.1.4.5, 4.3.12.9.1.4.5, 3.12.9.1.5.1, 4.3.12.9.1.5.1, 3.12.9.9, 4.3.12.9.9, 3.12.9.10, 4.3.12.9.10, 3.12.9.12
			TABLE(S)
			3.1.1.6.1–1
			PARAGRAPH(S)
		57000–NA–0102	3.12.4.2.6, 4.3.12.4.2.6
		57000–NA–0103B	3.12.2.2, 4.3.12.2.2 4.3.12.3.1.2 3.12.4.2.3, 4.3.12.4.2.3, 3.12.4.3.15, 4.3.12.4.3.15, 3.12.4.4.2 4.3.12.9.2

SSCBD	ENTRY DATE	CHANGE	PARAGRAPH(S)
			FIGURE(S)
		57000–NA–0103B	3.12.2.2–1, 3.12.4.4.2–1, 3.12.4.4.2–2
			PARAGRAPH(S)
		57000–NA–0104C	3.12.4.2.1, 4.3.12.4.2.1, 3.12.4.2.8, 4.3.12.4.2.8, 3.12.7.2, 4.3.12.7.2, 3.12.7.5.2, 4.3.12.7.5.2, 3.12.7.5.3, 4.3.12.7.5.3, 3.12.7.5.4, 4.3.12.7.5.4, Appendix E
		57000–NA–0105	3.2.2.6.1.1, 4.3.2.2.6.1.1
		57000–NA–0106C	3.1.2.5, 3.2.2.6.1.1, 3.3.5.1.4.1, 3.12.7.5.12, 4.3.1.2.5, 4.3.2.1.3.4, 4.3.2.2.7.1, 4.3.2.3.1, 4.3.12.4.2.8.1, 4.3.12.6.4.4, 4.3.12.6.4.5
			FIGURE(S)
			3.12.4.4.2–2
			PARAGRAPH(S)
		57000–NA–0107A	3.12.3.4, 4.3.12.3.4, 3.12.8, 4.3.12.8
			TABLE(S)
			3.12.3.4–1, 3.12.3.4–2, 4.3.12.3.4–1
			PARAGRAPH(S)
		57000–NA–0108	3.10.2, 3.10.2.2.1, 3.10.2.2.2, 4.3.10.2.2.2, 3.10.2.2.2.1, 4.3.10.2.2.2.1, 3.10.2.2.2.2, 4.3.10.2.2.2.2, 3.10.3.4.1, 4.3.10.3.4.1, 3.10..3.4.2, 4.3.10..3.4.2
			FIGURE(S)
			3.10.3.4.1–1, 3.10.3.4.2–1

SSCBD	ENTRY DATE	CHANGE	PARAGRAPH(S)
001822A	28–APR–98	57000–NA–0109B	3.1.1.4, 3.1.1.4.1 3.9.3, 3.9.3.4, 3,9,3,4,1, 3.9.3.4.2, 3.9.4, 4.3.1.1.3, 4.3.1.1.4, 4.3.1.1.4.1, 4.3.9.3.4, 4.3.9.3.4.1, 4.3.9.3.4.2, 4.3.9.4
			TABLE(S)
			3.9.3.4–1, 3.9.3.4–2, 3.9.4–1, 3.9.4–2
			FIGURE(S)
			3.9.3.4–1, 3.9.3.4–2, 3.9.3.4–3, 3.9.3.4–4, 3.9.4–1, 3.9.4–2, 3.9.4–3, 3.9.4–4
			PARAGRAPH(S)
		57000–NA–0111A	3.10.3.2, 3.12.4.1.1, 4.3.12.4.1.1
			PARAGRAPH(S)
		57000–NA–0112A	2.2, 3.1.1.2.1, 3.1.1.2.1.1, 3.1.1.2.1.2, 4.3.1.1.2.1, 4.3.1.1.2.1.1, 4.3.1.1.2.1.2
			FIGURE(S)
			3.1.1.2.1.1–1, 3.1.1.2.1.1–2 3.1.1.2.1.1–3, 3.1.1.2.1.2–1 3.1.1.2.1.2–2
			PARAGRAPH(S)
		57000–NA–0113	3.2.3.2, 4.3.2.3.2
			PARAGRAPH(S)
		57000–NA–0114D	3.3.6.1.3, 4.3.3.6.1.3
			PARAGRAPH(S)
		57000–NA–0115A	3.5.1.7 4.3.5.1.7

SSCBD	ENTRY DATE	CHANGE	PARAGRAPH(S)
		57000–NA–0116C	4.3.1.1.3
			TABLE(S)
			3.1.1.3–1
			PARAGRAPH(S)
		57000–NA–0117A	3.12.5.2.1, 4.3.12.5.2.1
			PARAGRAPH(S)
		57000–NA–0119B	2.1
			PARAGRAPH(S)
		57000–NA–0120	3.12.9.1 4.3.2.5.4
			TABLE(S)
			3.12.9.1–1
			PARAGRAPH(S)
		57000–NA–0121B	1.4
			PARAGRAPH(S)
		57000–NA–0122D	2.1, 3.12.7, 3.12.7.1, 3.12.7.2, 3.12.7.3, 3.12.7.4, 3.12.7.5, 3.12.7.5.1, 3.12.7.5.2, 3.12.7.5.3, 3.12.7.5.4, 3.12.7.5.5, 3.12.7.5.6, 3.12.7.5.7, 3.12.7.5.7.1, 3.12.7.5.8, 3.12.7.5.9, 3.12.7.5.10, 3.12.7.5.11, 3.12.7.5.12, 3.12.7.5.13, 3.12.7.6 4.3.12.7, 4.3.12.7.1, 4.3.12.7.2, 4.3.12.7.3, 4.3.12.7.4, 4.3.12.7.5, 4.3.12.7.5.1, 4.3.12.7.5.2, 4.3.12.7.5.3, 4.3.12.7.5.4, 4.3.12.7.5.5, 4.3.12.7.5.6, 4.3.12.7.5.7, 4.3.12.7.5.7.1, 4.3.12.7.5.8, 4.3.12.7.5.9, 4.3.12.7.5.10, 4.3.12.7.5.11, 4.3.12.7.5.12, 4.3.12.7.5.13, 4.3.12.7.6 Appendix C (New)
			FIGURE(S)
			3.12.7.5.11–1

SSCBD	ENTRY DATE	CHANGE	PARAGRAPH(S)
		57000–NA–0123A	3.2.4, 4.3.2.4, 4.3.2.4.4, 4.3.2.4.6, 4.3.2.4.7 Appendix B
			PARAGRAPH(S)
		57000–NA–0126C	3.2.5.4, 3.12.9.1, 4.3.2.5.4, 4.3.2.5.5, 4.3.12.9.1
			PARAGRAPH(S)
		57000–NA–0127B	3.2.1.2.1, 3.2.1.2.2, 4.3.2.1.2.1, 4.3.2.1.2.2
			PARAGRAPH(S)
		57000–NA–0128A	3.3.3, 3.3.4.1 3.3.4.1.1.2, 3.3.4.1.2, 3.3.4.1.4, 3.3.4.2.1, 3.3.4.2.2, 3.3.5, 3.3.5.1.2, 3.3.5.1.3, 3.3.5.1.4, 3.3.5.1.4.1.2, 3.3.5.1.4.1.3, 3.3.5.1.4.1.4, 3.3.5.1.5, 3.3.5.1.6, 3.3.5.1.7, 3.3.5.1.8, 3.3.5.1.10, 3.3.5.1.11, 3.3.5.1.12, 3.3.5.2.1.2, 3.3.5.2.1.3, 3.3.5.2.3, 4.3.3.2.1, 4.3.3.2.2, 4.3.3.2.3, 4.3.3.3, 4.3.3.4.1, 4.3.3.4.1.1, 4.3.3.4.1.1.1, 4.3.3.4.1.1.2, 4.3.3.4.1.2, 4.3.3.4.1.3, 4.3.3.4.1.4, 4.3.3.4.2.1, 4.3.3.5, 4.3.3.5.1.1, 4.3.3.5.1.2, 4.3.3.5.1.3, 4.3.3.5.1.4, 4.3.3.5.1.4.1.2, 4.3.3.5.1.4.1.3, 4.3.3.5.1.4.1.4, 4.3.3.5.1.5, 4.3.3.5.1.6, 4.3.3.5.1.7, 4.3.3.5.1.8, 4.3.3.5.1.9, 4.3.3.5.1.10, 4.3.3.5.1.11, 4.3.3.5.1.12, 4.3.3.5.2.1.2, 4.3.3.5.2.1.3, 4.3.3.5.2.2

SSCBD	ENTRY DATE	CHANGE	PARAGRAPH(S)
		57000–NA–0129A	3.1.1.6.1, 3.2.2.1
			TABLE(S)
			3.1.1.6.1–1
		57000–NA–0130	**PARAGRAPH(S)**
			3.2.5.1.1, 3.2.5.2, 3.3.10.1, 3.3.10.3, 4.3.2.2.8, 4.3.2.5.2, 4.3.3.10.1, 4.3.3.10.3, 4.3.12.9.1.2
			FIGURE(S)
			3.2.2.9–1, 4.3.2.2.8–2
		57000–NA–0131A	**PARAGRAPH(S)**
			3.2.3.1, 4.3.2.3.1
			FIGURE(S)
			3.2.3.1–1
		57000–NA–0133A	**PARAGRAPH(S)**
			3.5.1.15, 4.3.5.1.15
		57000–NA–0135H	**PARAGRAPH(S)**
			3.1.1.4, 3.1.1.7 3.1.1.7.1, 3.1.1.7.2, 3.1.1.7.3, 3.1.1.7.4, 3.1.1.7.5, 3.12.4.1, 4.3.1.1.4, 4.3.1.1.7, 4.3.1.1.7.1, 4.3.1.1.7.2, 4.3.1.1.7.3, 4.3.1.1.7.4, 4.3.1.1.7.5, 4.3.12.4.1 Appendix B
			FIGURE(S)
			3.1.1.4–1, 3.1.1.7.2–1, 3.1.1.7.3–1, 3.1.1.7.5–1
		57000–NA–0136C	**PARAGRAPH(S)**
			2.1, 3.3.8, 3.12.11, 4.3.3.8, 4.3.12.11

SSCBD	ENTRY DATE	CHANGE	PARAGRAPH(S)
		57000–NA–0137	3.2.6.2.2, 3.2.6.2.4, 3.2.6.3, 4.3.2.6.2.2, 4.3.2.6.2.4, 4.3.2.6.3
			TABLE(S)
			3.2.6.2.4–1
			FIGURE(S)
			3.2.6.2.2–1
			PARAGRAPH(S)
002533	21–JUL–99	57000–NA–0132C	3.6.1.5, 3.6.1.5.1 3.12.3.1.6, 4.3.6.1.5, 4.3.6.1.5.1, 4.3.12.3.1.6
			TABLE(S)
			2.1 4.3.6.1.5–1, Appendix A, Appendix B, Appendix D1, Appendix D2 new, Appendix D3 new, Appendix D4 new, Appendix D5 new, Appendix D6 new
			PARAGRAPH(S)
		57000–NA–0139B	3.2.5.2, 3.2.5.3, 4.3.2.5.3
			PARAGRAPH(S)
		57000–NA–0140A	3.12.4.3.3, 4.3.12.4.3.3
			TABLE(S)
		57000–NA–0141	3.12.3.4–1
			PARAGRAPH(S)
		57000–NA–0143A	3.2.5.4, 3.2.5.5, 4.3.2.5.4, 4.3.2.5.5
			PARAGRAPH(S)
		57000–NA–0146A	2.1, 3.3.5, 4.3.3.5, 4.3.3.5.1.9, 4.3.3.5.1.10, 4.3.3.5.1.11 4.3.3.5.1.12, 4.3.3.5.2.2, 3.3.5.2.4, 4.3.3.5.2.4

SSCBD	ENTRY DATE	CHANGE	PARAGRAPH(S)
		57000–NA–0147A	3.5.1.3, 4.3.5.1.3
			PARAGRAPH(S)
		57000–NA–0149	3.2.4.9, 4.3.2.4.9
			PARAGRAPH(S)
		57000–NA–0150C	3.5.1.13, 4.3.5.1.13
			TABLE(S)
			3.5.1.13–1
			PARAGRAPH(S)
		57000–NA–0152A	3.2.2.6.2.1.1, 3.2.6.2.5 4.3.2.6.2.1.1
			PARAGRAPH(S)
		57000–NA–0153	3.2.2.6.1.1
			TABLE(S)
		57000–NA–0154	3.9.3.4–1
			PARAGRAPH(S)
		57000–NA–0155	3.1.1.3
			TABLE(S)
			3.1.1.3–2, 3.1.1.3–3, 3.1.1.3–4
			PARAGRAPH(S)
		57000–NA–0156A	3.5.1.11
			PARAGRAPH(S)
		57000–NA–0157A	3.9.1.3, 4.3.9.1.3
			FIGURE(S)
			3.9.1.3–1
			TABLE(S)
			3.9.4–1
			PARAGRAPH(S)
		57000–NA–0158	3.5.1.9
			PARAGRAPH(S)
		57000–NA–0159	3.7.1.4
			PARAGRAPH(S)
		57000–NA–0160	2.1, 3.1.3

SSCBD	ENTRY DATE	CHANGE	PARAGRAPH(S)
		57000–NA–0162	3.2.1.4, 3.2.6.1, 4.3.2.1.4, 4.3.2.6.1
			PARAGRAPH(S)
		57000–NA–0163A	3.6.1.2, 4.3.6.1.2
			PARAGRAPH(S)
		57000–NA–0164B	4.3.12.7.1, 4.3.12.7.5.9, C.2, C.3.4, C.3.5.1, C3.5.2, C.3.5.3, C.3.5.4, C.3.5.5.2, C.3.5.6, C.3.5.7, C.3.5.8, C.3.5.9, C.3.5.10.2, C.3.5.11, C.3.6
			FIGURE(S)
			C.1–1, C.3.5.3–2, C.3.5.4.2.1–1, C.3.5.8–1
			PARAGRAPH(S)
		57000–NA–0165A	3.2.5.2, 3.3.10.1
			PARAGRAPH(S)
		57000–NA–0166B	3.3.7.2.1, 3.3.7.2.1.1, 4.3.3.7.2.1, 4.3.3.7.2.1.1
			PARAGRAPH(S)
		57000–NA–0167	3.3.7.3.1, 3.3.7.3.2

SSCBD	ENTRY DATE	CHANGE	PARAGRAPH(S)
		57000–NA–0168B	3.1.1.3, 3.1.1.4, 3.2.1, 3.6.1, 3.6.1.1., 3.6.1.2, 3.6.1.5, 3.6.2, 3.6.2.1, 3.6.2.2., 3.6.2.3, 3.6.2.4, 3.7.1.5, 3.7.2.1, 3.7.2.3, 3.7.2.5, 3.7.3.1, 3.7.3.3, 3.7.3.5, 3.7.4.1, 3.7.4.3, 3.7.4.5, 3.12.4.4.13, 4.3.5.1.9, 4.3.12.4.4.13
			TABLE(S)
			3.1.1.3–1, 3.1.1.3–3, 3.1.1.6.1–1, 3.2.1–1, 3.9.4–1
			PARAGRAPH(S)
		57000–NA–0170	3.2.2.10, 3.2.4.4, 4.3.2.2.10
			PARAGRAPH(S)
		57000–NA–0174A	3.3.5.2.1.4, 4.3.3.5.2.1.4
			FIGURE(S)
			3.3.5.2.1.4–1
			TABLE(S)
			3.3.5.2.1.4–1
			PARAGRAPH(S)
		57000–NA–0177A	4.3.2.4.8

(This Page Intentionally Left Blank)

TABLE OF CONTENTS

PARAGRAPH		PAGE
1.0	INTRODUCTION	1 – 1
1.1	PURPOSE	1 – 1
1.2	SCOPE	1 – 1
1.3	USE	1 – 1
1.4	EXCEPTIONS	1 – 1
2.0	DOCUMENTATION	2 – 1
2.1	APPLICABLE DOCUMENTS	2 – 1
2.2	REFERENCE DOCUMENTS	2 – 5
3.0	PAYLOAD INTERFACE REQUIREMENTS AND GUIDANCE	3 – 1
3.1	STRUCTURAL/MECHANICAL, AND MICROGRAVITY AND STOWAGE INTERFACE REQUIREMENTS	3 – 1
3.1.1	STRUCTURAL/MECHANICAL	3 – 1
3.1.1.1	GSE INTERFACES	3 – 1
3.1.1.2	MPLM INTERFACES	3 – 1
3.1.1.2.1	MPLM LATE/EARLY ACCESS REQUIREMENTS	3 – 2
3.1.1.2.1.1	MPLM LATE ACCESS ENVELOPE (KSC)	3 – 2
3.1.1.2.1.2	MPLM EARLY ACCESS ENVELOPES (KSC AND DFRC)	3 – 6
3.1.1.3	LOADS REQUIREMENTS	3 – 7
3.1.1.4	RACK REQUIREMENTS	3 – 9
3.1.1.4.1	LAB WINDOW RACK LOCATION REQUIREMENTS	3 – 10
3.1.1.5	SAFETY CRITICAL STRUCTURES REQUIREMENTS	3 – 12
3.1.1.6	CONNECTOR AND UMBILICAL PHYSICAL MATE	3 – 12
3.1.1.6.1	CONNECTOR PHYSICAL MATE	3 – 12
3.1.1.6.2	UMBILICAL PHYSICAL MATE	3 – 14
3.1.1.7	ON–ORBIT PAYLOAD PROTRUSIONS	3 – 14
3.1.1.7.1	ON–ORBIT PERMANENT PROTRUSIONS	3 – 15
3.1.1.7.2	ON–ORBIT SEMI–PERMANENT PROTRUSIONS	3 – 15
3.1.1.7.3	ON–ORBIT TEMPORARY PROTRUSIONS	3 – 15
3.1.1.7.4	ON–ORBIT MOMENTARY PROTRUSIONS	3 – 16
3.1.1.7.5	ON–ORBIT PROTRUSIONS FOR KEEP ALIVE PAYLOADS	3 – 16
3.1.2	MICROGRAVITY	3 – 19
3.1.2.1	QUASI-STEADY REQUIREMENTS	3 – 19
3.1.2.2	VIBRATORY REQUIREMENTS	3 – 19
3.1.2.3	TRANSIENT REQUIREMENTS	3 – 20
3.1.2.4	MICROGRAVITY ENVIRONMENT	3 – 20
3.1.2.5	ARIS INTERFACES	3 – 20
3.1.3	STOWAGE	3 – 20
3.2	ELECTRICAL INTERFACE REQUIREMENTS	3 – 20
3.2.1	ELECTRICAL POWER CHARACTERISTICS	3 – 20
3.2.1.1	STEADY-STATE VOLTAGE CHARACTERISTICS	3 – 20
3.2.1.1.1	INTERFACE B	3 – 20
3.2.1.1.2	INTERFACE C	3 – 20
3.2.1.2	RIPPLE VOLTAGE CHARACTERISTICS	3 – 21

TABLE OF CONTENTS (Continued)

PARAGRAPH		PAGE
3.2.1.2.1	RIPPLE VOLTAGE AND NOISE	3 – 21
3.2.1.2.2	RIPPLE VOLTAGE SPECTRUM	3 – 22
3.2.1.3	TRANSIENT VOLTAGES	3 – 22
3.2.1.3.1	INTERFACE B	3 – 22
3.2.1.3.2	INTERFACE C	3 – 22
3.2.1.3.3	FAULT CLEARING AND PROTECTION	3 – 23
3.2.1.3.4	NON-NORMAL VOLTAGE RANGE	3 – 25
3.2.1.4	DELETE	3 – 25
3.2.2	ELECTRICAL POWER INTERFACE	3 – 25
3.2.2.1	UIP AND UOP CONNECTORS AND PIN ASSIGNMENTS	3 – 25
3.2.2.2	POWER BUS ISOLATION	3 – 25
3.2.2.3	COMPATIBILITY WITH SIFT START/STOP RPC	3 – 26
3.2.2.4	SURGE CURRENT	3 – 27
3.2.2.5	REVERSE ENERGY/CURRENT	3 – 29
3.2.2.6	CIRCUIT PROTECTION DEVICES	3 – 29
3.2.2.6.1	ISS EPS CIRCUIT PROTECTION CHARACTERISTICS	3 – 29
3.2.2.6.1.1	REMOTE POWER CONTROLLERS (RPCS)	3 – 29
3.2.2.6.2	EPCE RPC INTERFACE REQUIREMENTS	3 – 30
3.2.2.6.2.1	RPC TRIP COORDINATION	3 – 30
3.2.2.6.2.1.1	PAYLOAD TRIP RATINGS	3 – 30
3.2.2.6.2.1.2	DELETED	3 – 30
3.2.2.7	EPCE COMPLEX LOAD IMPEDANCES	3 – 30
3.2.2.7.1	INTERFACE B	3 – 30
3.2.2.7.2	INTERFACE C	3 – 35
3.2.2.8	LARGE SIGNAL STABILITY	3 – 35
3.2.2.9	MAXIMUM RIPPLE VOLTAGE EMISSIONS	3 – 35
3.2.2.10	ELECTRICAL LOAD-STAND ALONE STABILITY	3 – 35
3.2.3	ELECTRICAL POWER CONSUMER CONSTRAINTS	3 – 38
3.2.3.1	WIRE DERATING	3 – 38
3.2.3.2	EXCLUSIVE POWER FEEDS	3 – 38
3.2.3.3	LOSS OF POWER	3 – 39
3.2.4	ELECTROMAGNETIC COMPATIBILITY	3 – 39
3.2.4.1	ELECTRICAL GROUNDING	3 – 39
3.2.4.2	ELECTRICAL BONDING	3 – 39
3.2.4.3	CABLE/WIRE DESIGN AND CONTROL REQUIREMENTS	3 – 39
3.2.4.4	ELECTROMAGNETIC INTERFERENCE	3 – 39
3.2.4.5	ELECTROSTATIC DISCHARGE	3 – 40
3.2.4.6	ALTERNATING CURRENT (AC) MAGNETIC FIELDS	3 – 40
3.2.4.7	DIRECT CURRENT (DC) MAGNETIC FIELDS	3 – 40
3.2.4.8	CORONA	3 – 41
3.2.4.9	LIGHTNING	3 – 41
3.2.4.10	EMI SUSCEPTIBILITY FOR SAFETY-CRITICAL CIRCUITS	3 – 41
3.2.5	SAFETY REQUIREMENTS	3 – 41

TABLE OF CONTENTS (Continued)

PARAGRAPH		PAGE
3.2.5.1	PAYLOAD ELECTRICAL SAFETY	3 – 41
3.2.5.1.1	MATING/DEMATING OF POWERED CONNECTORS	3 – 41
3.2.5.1.2	SAFETY-CRITICAL CIRCUITS REDUNDANCY	3 – 41
3.2.5.2	RACK MAINTENANCE SWITCH (RACK POWER SWITCH)	3 – 41
3.2.5.3	POWER SWITCHES/CONTROLS	3 – 42
3.2.5.4	GROUND FAULT CIRCUIT INTERRUPTERS (GFCI)/PORTABLE EQUIPMENT DC SOURCING VOLTAGE	3 – 42
3.2.5.5	PORTABLE EQUIPMENT/POWER CORDS	3 – 43
3.2.5.6	DELETED	3 – 44
3.2.6	MPLM	3 – 44
3.2.6.1	MPLM ELECTRICAL POWER CHARACTERISTICS	3 – 44
3.2.6.2	MPLM ELECTRICAL POWER INTERFACE	3 – 44
3.2.6.2.1	MPLM UIP CONNECTORS AND PIN ASSIGNMENTS	3 – 45
3.2.6.2.2	COMPATIBILITY WITH RPC SOFT START/STOP IN MPLM	3 – 45
3.2.6.2.3	MPLM SURGE CURRENT	3 – 46
3.2.6.2.4	MPLM REVERSE ENERGY/CURRENT	3 – 46
3.2.6.2.5	MPLM PAYLOAD TRIP RATINGS	3 – 47
3.2.6.3	MPLM ELECTRICAL POWER CONSUMER CONSTRAINTS	3 – 47
3.2.6.4	MPLM ELECTROMAGNETIC COMPATIBILITY	3 – 47
3.2.6.4.1	MPLM BONDING	3 – 48
3.2.6.5	MPLM SAFETY REQUIREMENTS	3 – 48
3.3	COMMAND AND DATA HANDLING INTERFACE REQUIREMENTS	3 – 48
3.3.1	GENERAL REQUIREMENTS	3 – 48
3.3.2	WORD/BYTE NOTATIONS, TYPES AND DATA TRANSMISSIONS	3 – 48
3.3.2.1	WORD/BYTE NOTATIONS	3 – 49
3.3.2.2	DATA TYPES	3 – 49
3.3.2.3	DATA TRANSMISSIONS	3 – 49
3.3.3	DELETED	3 – 49
3.3.4	CONSULTATIVE COMMITTEE FOR SPACE DATA SYSTEMS	3 – 49
3.3.4.1	CCSDS DATA	3 – 49
3.3.4.1.1	CCSDS DATA PACKETS	3 – 50
3.3.4.2	CCSDS DATA	3 – 50
3.3.4.2.1	CCSDS DATA PACKETS	3 – 50
3.3.4.2.1.1	CCSDS PRIMARY HEADER	3 – 50
3.3.4.2.1.2	CCSDS SECONDARY HEADER	3 – 50
3.3.4.2.2	CCSDS DATA FIELD	3 – 50
3.3.4.2.3	CCSDS DATA BITSTREAM	3 – 51
3.3.4.2.4	CCSDS APPLICATION PROCESS IDENTIFICATION FIELD	3 – 51
3.3.4.3	CCSDS TIME CODES	3 – 51
3.3.4.3.1	CCSDS UNSEGMENTED TIME	3 – 51
3.3.4.3.2	CCSDS SEGMENTED TIME	3 – 51
3.3.5	MIL-STD-1553B LOW RATE DATA LINK (LRDL)	3 – 51

TABLE OF CONTENTS (Continued)

PARAGRAPH		PAGE
3.3.5.1	MIL-STD-1553B PROTOCOL	3 – 52
3.3.5.1.1	STANDARD MESSAGES	3 – 52
3.3.5.1.2	COMMANDING	3 – 52
3.3.5.1.3	HEALTH AND STATUS DATA	3 – 52
3.3.5.1.4	SAFETY DATA	3 – 52
3.3.5.1.4.1	CAUTION AND WARNING	3 – 52
3.3.5.1.4.1.1	CLASS 1 – EMERGENCY	3 – 53
3.3.5.1.4.1.2	CLASS 2 – WARNING	3 – 53
3.3.5.1.4.1.3	CLASS 3 – CAUTION	3 – 54
3.3.5.1.4.1.4	CLASS 4 – ADVISORY	3 – 54
3.3.5.1.5	SERVICE REQUESTS	3 – 54
3.3.5.1.6	ANCILLARY DATA	3 – 54
3.3.5.1.7	FILE TRANSFER	3 – 54
3.3.5.1.8	LOW RATE TELEMETRY	3 – 55
3.3.5.1.9	DEFINED MODE CODES	3 – 55
3.3.5.1.10	IMPLEMENTED MODE CODES	3 – 55
3.3.5.1.11	UNIMPLEMENTED/UNDEFINED MODE CODES	3 – 55
3.3.5.1.12	ILLEGAL COMMANDS	3 – 55
3.3.5.2	MIL-STD-1553B LOW RATE DATA LINK (LRDL) INTERFACE CHARACTERISTICS	3 – 55
3.3.5.2.1	LRDL REMOTE TERMINAL ASSIGNMENT	3 – 55
3.3.5.2.1.1	LRDL CONNECTOR/PIN ASSIGNMENTS	3 – 55
3.3.5.2.1.2	MIL–STD–1553B BUS A AND B CONNECTOR/PIN ASSIGNMENT	3 – 55
3.3.5.2.1.3	DELETED	3 – 56
3.3.5.2.1.4	REMOTE TERMINAL HARDWIRED ADDRESS CODING	3 – 56
3.3.5.2.2	LRDL SIGNAL CHARACTERISTICS	3 – 58
3.3.5.2.3	LRDL CABLING	3 – 58
3.3.5.2.4	MULTI–BUS ISOLATION	3 – 59
3.3.6	MEDIUM RATE DATA LINK (MRDL)	3 – 59
3.3.6.1	MRDL PROTOCOL	3 – 59
3.3.6.1.1	INTEGRATED RACK PROTOCOLS ON THE MRDL	3 – 59
3.3.6.1.2	MRDL ADDRESS	3 – 59
3.3.6.1.3	ISPR MRDL CONNECTIVITY	3 – 60
3.3.6.1.4	MRDL CONNECTOR/PIN ASSIGNMENTS AND WIRE REQUIREMENTS	3 – 60
3.3.6.1.4.1	DELETED	3 – 61
3.3.6.1.4.2	DELETED	3 – 61
3.3.6.1.5	MRDL SIGNAL CHARACTERISTICS	3 – 61
3.3.6.1.6	MRDL CABLE CHARACTERISTICS	3 – 61
3.3.6.1.6.1	INSERTION LOSS	3 – 61
3.3.6.1.6.2	DIFFERENTIAL CHARACTERISTIC IMPEDANCE	3 – 61
3.3.6.1.6.3	MEDIUM TIMING JITTER	3 – 61
3.3.7	HIGH RATE DATA LINK (HRDL)	3 – 62

TABLE OF CONTENTS (Continued)

PARAGRAPH		PAGE
3.3.7.1	PAYLOAD TO HIGH RATE FRAME MULTIPLEXER (HRFM) PROTOCOLS	3 – 62
3.3.7.2	HRDL INTERFACE CHARACTERISTICS	3 – 62
3.3.7.2.1	PHYSICAL SIGNALING	3 – 62
3.3.7.2.1.1	PHYSICAL SIGNALING DATE RATES	3 – 62
3.3.7.2.2	ENCODING	3 – 63
3.3.7.2.3	SYMBOLS USED IN TESTING	3 – 63
3.3.7.3	INTEGRATED RACK HRDL OPTICAL POWER	3 – 63
3.3.7.3.1	INTEGRATED RACK HRDL TRANSMITTED OPTICAL POWER	3 – 63
3.3.7.3.2	INTEGRATED RACK HRDL RECEIVED OPTICAL POWER	3 – 63
3.3.7.4	HRDL FIBER OPTIC CABLE	3 – 63
3.3.7.5	HRDL FIBER OPTIC CABLE BEND RADIUS	3 – 63
3.3.7.6	HRDL CONNECTORS AND FIBER	3 – 64
3.3.7.7	DELETED	3 – 64
3.3.8	PERSONAL COMPUTERS	3 – 64
3.3.8.1	PAYLOAD LAPTOP	3 – 64
3.3.8.2	PCS	3 – 66
3.3.8.2.1	PCS TO UOP INTERFACE	3 – 66
3.3.8.2.2	760XD LAPTOP TO RACK INTERFACE	3 – 66
3.3.8.3	SSC	3 – 67
3.3.9	UOP	3 – 67
3.3.10	MAINTENANCE SWITCH, SMOKE DETECTOR, SMOKE INDICATOR, AND INTEGRATED RACK FAN INTERFACES	3 – 67
3.3.10.1	RACK MAINTENANCE SWITCH (RACK POWER SWITCH) INTERFACES	3 – 67
3.3.10.2	SMOKE DETECTOR INTERFACES	3 – 68
3.3.10.2.1	ANALOG INTERFACE CHARACTERISTICS	3 – 68
3.3.10.2.2	DISCRETE COMMAND BUILT-IN-TEST INTERFACE CHARACTERISTICS	3 – 69
3.3.10.2.3	SMOKE INDICATOR ELECTRICAL INTERFACES	3 – 69
3.3.10.2.4	FAN VENTILATION STATUS ELECTRICAL INTERFACES	3 – 70
3.3.10.3	RACK MAINTENANCE SWITCH (RACK POWER SWITCH)/FIRE DETECTION SUPPORT INTERFACE CONNECTOR	3 – 70
3.4	PAYLOAD NTSC VIDEO AND AUDIO INTERFACE REQUIREMENTS	3 – 70
3.4.1	PAYLOAD NTSC VIDEO INTERFACE REQUIREMENTS	3 – 71
3.4.1.1	PAYLOAD NTSC VIDEO CHARACTERISTICS	3 – 71
3.4.1.2	NTSC FIBER OPTIC VIDEO	3 – 73
3.4.1.2.1	PULSE FREQUENCY MODULATION NTSC FIBER OPTIC VIDEO CHARACTERISTICS	3 – 73
3.4.1.2.2	INTEGRATED RACK NTSC PFM VIDEO TRANSMITTED OPTICAL POWER	3 – 73
3.4.1.2.3	INTEGRATED RACK NTSC PFM VIDEO AND SYNC SIGNAL RECEIVED OPTICAL POWER	3 – 74

TABLE OF CONTENTS (Continued)

PARAGRAPH		PAGE
3.4.1.2.4	FIBER OPTIC CABLE CHARACTERISTICS	3 – 74
3.4.1.2.5	PFM NTSC VIDEO FIBER OPTIC CABLE BEND RADIUS	3 – 74
3.4.1.2.6	DELETED	3 – 75
3.4.1.2.7	PFM NTSC OPTICAL CONNECTOR/PIN ASSIGNMENTS	3 – 75
3.4.1.3	NTSC ELECTRICAL VIDEO INTERFACES	3 – 75
3.4.1.3.1	NTSC ELECTRICAL VIDEO CHARACTERISTICS	3 – 75
3.4.1.3.2	DELETED	3 – 75
3.4.1.4	NTSC ELECTRICAL CONNECTOR/PIN ASSIGNMENTS	3 – 75
3.4.2	U.S. ELEMENT AUDIO INTERFACE REQUIREMENTS	3 – 75
3.5	THERMAL CONTROL INTERFACE REQUIREMENTS	3 – 76
3.5.1	INTERNAL THERMAL CONTROL SYSTEM (ITCS) INTERFACE REQUIREMENTS	3 – 76
3.5.1.1	PHYSICAL INTERFACE	3 – 76
3.5.1.2	ITCS FLUID USE AND CHARGING	3 – 76
3.5.1.3	ITCS PRESSURE DROP	3 – 76
3.5.1.4	COOLANT FLOW RATE	3 – 77
3.5.1.5	COOLANT SUPPLY TEMPERATURE	3 – 77
3.5.1.6	COOLANT RETURN TEMPERATURE	3 – 77
3.5.1.7	COOLANT MAXIMUM DESIGN PRESSURE	3 – 78
3.5.1.8	FAIL SAFE DESIGN	3 – 78
3.5.1.9	LEAKAGE	3 – 78
3.5.1.10	QUICK-DISCONNECT AIR INCLUSION	3 – 78
3.5.1.11	RACK FRONT SURFACE TEMPERATURE	3 – 79
3.5.1.12	CABIN AIR HEAT LEAK	3 – 79
3.5.1.13	MPLM CABIN AIR COOLING	3 – 79
3.5.1.14	SIMULTANEOUS COOLING	3 – 80
3.5.1.15	CONTROL SYSTEM TIME CONSTANT	3 – 80
3.5.1.16	PAYLOAD COOLANT QUANTITY	3 – 80
3.5.1.17	PAYLOAD GAS INCLUSION	3 – 80
3.6	VACUUM SYSTEM REQUIREMENTS	3 – 80
3.6.1	VACUUM EXHAUST SYSTEM (VES)/WASTE GAS SYSTEM (WGS) REQUIREMENTS	3 – 80
3.6.1.1	VES/WGS PHYSICAL INTERFACE	3 – 80
3.6.1.2	INPUT PRESSURE LIMIT	3 – 81
3.6.1.3	INPUT TEMPERATURE LIMIT	3 – 81
3.6.1.4	INPUT DEWPOINT LIMIT	3 – 81
3.6.1.5	ACCEPTABLE EXHAUST GASES	3 – 81
3.6.1.5.1	ACCEPTABLE GASES – LIST	3 – 81
3.6.1.5.2	EXTERNAL CONTAMINATION CONTROL	3 – 82
3.6.1.5.3	INCOMPATIBLE GASES	3 – 82
3.6.2	VACUUM RESOURCE SYSTEM (VRS)/VACUUM VENT SYSTEM (VVS) REQUIREMENTS	3 – 82
3.6.2.1	VRS/VVS PHYSICAL INTERFACE	3 – 82

TABLE OF CONTENTS (Continued)

PARAGRAPH		PAGE
3.6.2.2	INPUT PRESSURE LIMIT	3 – 82
3.6.2.3	VRS/VVS THROUGH-PUT LIMIT	3 – 83
3.6.2.4	ACCEPTABLE GASES	3 – 83
3.7	PRESSURIZED GASES INTERFACE REQUIREMENTS	3 – 83
3.7.1	NITROGEN INTERFACE REQUIREMENTS	3 – 83
3.7.1.1	NITROGEN INTERFACE CONTROL	3 – 83
3.7.1.2	NITROGEN INTERFACE MDP	3 – 83
3.7.1.3	NITROGEN INTERFACE TEMPERATURE	3 – 83
3.7.1.4	NITROGEN LEAKAGE	3 – 83
3.7.1.5	NITROGEN PHYSICAL INTERFACE	3 – 84
3.7.2	ARGON INTERFACE REQUIREMENTS	3 – 84
3.7.2.1	ARGON INTERFACE CONTROL	3 – 84
3.7.2.2	ARGON INTERFACE MDP	3 – 84
3.7.2.3	ARGON INTERFACE TEMPERATURE	3 – 84
3.7.2.4	ARGON LEAKAGE	3 – 84
3.7.2.5	ARGON PHYSICAL INTERFACE	3 – 84
3.7.3	CARBON DIOXIDE INTERFACE REQUIREMENTS	3 – 85
3.7.3.1	CARBON DIOXIDE INTERFACE CONTROL	3 – 85
3.7.3.2	CARBON DIOXIDE INTERFACE MDP	3 – 85
3.7.3.3	CARBON DIOXIDE INTERFACE TEMPERATURE	3 – 85
3.7.3.4	CARBON DIOXIDE LEAKAGE	3 – 85
3.7.3.5	CARBON DIOXIDE PHYSICAL INTERFACE	3 – 85
3.7.4	HELIUM INTERFACE REQUIREMENTS	3 – 85
3.7.4.1	HELIUM INTERFACE CONTROL	3 – 85
3.7.4.2	HELIUM INTERFACE MDP	3 – 86
3.7.4.3	HELIUM INTERFACE TEMPERATURE	3 – 86
3.7.4.4	HELIUM LEAKAGE	3 – 86
3.7.4.5	HELIUM PHYSICAL INTERFACE	3 – 86
3.7.5	PRESSURIZED GAS BOTTLES	3 – 86
3.7.6	MANUAL VALVES	3 – 86
3.8	PAYLOAD SUPPORT SERVICES INTERFACES REQUIREMENTS	3 – 86
3.8.1	POTABLE WATER	3 – 86
3.8.1.1	POTABLE WATER INTERFACE CONNECTION	3 – 86
3.8.1.2	POTABLE WATER INTERFACE PRESSURE	3 – 87
3.8.1.3	POTABLE WATER USE	3 – 87
3.8.2	FLUID SYSTEM SERVICER	3 – 87
3.9	ENVIRONMENT INTERFACE REQUIREMENTS	3 – 87
3.9.1	ATMOSPHERE REQUIREMENTS	3 – 87
3.9.1.1	PRESSURE	3 – 87
3.9.1.2	TEMPERATURE	3 – 87
3.9.1.3	HUMIDITY	3 – 88
3.9.2	INTEGRATED RACK USE OF CABIN ATMOSPHERE	3 – 88
3.9.2.1	ACTIVE AIR EXCHANGE	3 – 88

TABLE OF CONTENTS (Continued)

PARAGRAPH		PAGE
3.9.2.2	OXYGEN CONSUMPTION	3 – 89
3.9.2.3	CHEMICAL RELEASES	3 – 89
3.9.3	RADIATION REQUIREMENTS	3 – 89
3.9.3.1	INTEGRATED RACK CONTAINED OR GENERATED IONIZING RADIATION	3 – 89
3.9.3.2	IONIZING RADIATION DOSE	3 – 89
3.9.3.3	SINGLE EVENT EFFECT (SEE) IONIZING RADIATION	3 – 89
3.9.3.4	LAB WINDOW RACK LOCATION RADIATION REQUIREMENTS	3 – 89
3.9.3.4.1	WINDOW RACK INFRARED RADIATION REQUIREMENTS	3 – 90
3.9.3.4.2	WINDOW RACK ULTRAVIOLET RADIATION REQUIREMENTS	3 – 90
3.9.4	ADDITIONAL ENVIRONMENTAL CONDITIONS	3 – 91
3.10	FIRE PROTECTION INTERFACE REQUIREMENTS	3 – 96
3.10.1	FIRE PREVENTION	3 – 96
3.10.2	PAYLOAD MONITORING AND DETECTION REQUIREMENTS	3 – 96
3.10.2.1	SMOKE DETECTION	3 – 96
3.10.2.1.1	SMOKE DETECTOR	3 – 96
3.10.2.1.2	FORCED AIR CIRCULATION INDICATION	3 – 96
3.10.2.1.3	FIRE DETECTION INDICATOR	3 – 96
3.10.2.2	PARAMETER MONITORING	3 – 97
3.10.2.2.1	PARAMETER MONITORING USE	3 – 97
3.10.2.2.2	PARAMETER MONITORING RESPONSE	3 – 97
3.10.2.2.2.1	PARAMETER MONITORING IN SUBRACK	3 – 97
3.10.2.2.2.2	PARAMETER MONITORING IN INTEGRATED RACK	3 – 97
3.10.3	FIRE SUPPRESSION	3 – 98
3.10.3.1	PORTABLE FIRE EXTINGUISHER	3 – 98
3.10.3.2	FIRE SUPPRESSION ACCESS PORT ACCESSIBILITY	3 – 98
3.10.3.3	FIRE SUPPRESSANT DISTRIBUTION	3 – 100
3.10.3.4	DELETED	3 – 101
3.10.3.4.1	DELETED	3 – 101
3.10.3.4.2	DELETED	3 – 101
3.10.4	LABELING	3 – 101
3.11	MATERIALS AND PARTS INTERFACE REQUIREMENTS	3 – 101
3.11.1	MATERIALS AND PARTS USE AND SELECTION	3 – 101
3.11.1.1	COMMERCIAL PARTS	3 – 101
3.11.2	FLUIDS	3 – 101
3.11.3	CLEANLINESS	3 – 102
3.11.4	FUNGUS RESISTANT MATERIAL	3 – 102
3.12	HUMAN FACTORS INTERFACE REQUIREMENTS	3 – 102
3.12.1	STRENGTH REQUIREMENTS	3 – 102
3.12.2	BODY ENVELOPE AND REACH ACCESSIBILITY	3 – 106
3.12.2.1	ADEQUATE CLEARANCE	3 – 106
3.12.2.2	ACCESSIBILITY	3 – 106
3.12.2.3	FULL SIZE RANGE ACCOMMODATION	3 – 107

TABLE OF CONTENTS (Continued)

PARAGRAPH		PAGE
3.12.3	HABITABILITY	3 – 107
3.12.3.1	HOUSEKEEPING	3 – 107
3.12.3.1.1	CLOSURES OR COVERS	3 – 107
3.12.3.1.2	BUILT-IN CONTROL	3 – 107
3.12.3.1.3	DELETED	3 – 107
3.12.3.1.4	DELETED	3 – 107
3.12.3.1.5	ONE-HANDED OPERATION	3 – 107
3.12.3.1.6	DELETED	3 – 107
3.12.3.2	TOUCH TEMPERATURE	3 – 108
3.12.3.2.1	CONTINUOUS/INCIDENTAL CONTACT - HIGH TEMPERATURE	3 – 108
3.12.3.2.2	CONTINUOUS/INCIDENTAL CONTACT – LOW TEMPERATURE	3 – 108
3.12.3.3	ACOUSTIC REQUIREMENTS	3 – 108
3.12.3.3.1	CONTINUOUS NOISE LIMITS	3 – 110
3.12.3.3.2	INTERMITTENT NOISE LIMITS	3 – 112
3.12.3.4	LIGHTING DESIGN	3 – 114
3.12.4	STRUCTURAL/MECHANICAL INTERFACES	3 – 116
3.12.4.1	DELETED	3 – 116
3.12.4.1.1	DELETED	3 – 116
3.12.4.2	PAYLOAD HARDWARE MOUNTING	3 – 116
3.12.4.2.1	EQUIPMENT MOUNTING	3 – 116
3.12.4.2.2	DRAWERS AND HINGED PANELS	3 – 116
3.12.4.2.3	DELETED	3 – 116
3.12.4.2.4	DELETED	3 – 116
3.12.4.2.5	ALIGNMENT	3 – 116
3.12.4.2.5.1	DELETED	3 – 116
3.12.4.2.6	SLIDE-OUT STOPS	3 – 116
3.12.4.2.7	PUSH-PULL FORCE	3 – 116
3.12.4.2.8	ACCESS	3 – 117
3.12.4.2.8.1	COVERS	3 – 117
3.12.4.2.8.2	SELF-SUPPORTING COVERS	3 – 117
3.12.4.2.8.3	DELETED	3 – 117
3.12.4.2.8.4	UNIQUE TOOLS	3 – 117
3.12.4.3	CONNECTORS	3 – 117
3.12.4.3.1	ONE-HANDED OPERATION	3 – 117
3.12.4.3.2	ACCESSIBILITY	3 – 117
3.12.4.3.3	EASE OF DISCONNECT	3 – 118
3.12.4.3.4	INDICATION OF PRESSURE/FLOW	3 – 118
3.12.4.3.5	SELF LOCKING	3 – 118
3.12.4.3.6	CONNECTOR ARRANGEMENT	3 – 118
3.12.4.3.7	ARC CONTAINMENT	3 – 118
3.12.4.3.8	CONNECTOR PROTECTION	3 – 119
3.12.4.3.9	CONNECTOR SHAPE	3 – 119
3.12.4.3.10	FLUID AND GAS LINE CONNECTORS	3 – 119

TABLE OF CONTENTS (Continued)

PARAGRAPH		PAGE
3.12.4.3.11	ALIGNMENT MARKS OR GUIDE PINS	3 – 119
3.12.4.3.12	CODING	3 – 119
3.12.4.3.13	PIN IDENTIFICATION	3 – 119
3.12.4.3.14	ORIENTATION	3 – 119
3.12.4.3.15	HOSE/CABLE RESTRAINTS	3 – 120
3.12.4.4	FASTENERS	3 – 120
3.12.4.4.1	NON-THREADED FASTENERS STATUS INDICATION	3 – 120
3.12.4.4.2	MOUNTING BOLT/FASTENER SPACING	3 – 120
3.12.4.4.3	DELETED	3 – 121
3.12.4.4.4	MULTIPLE FASTENERS	3 – 121
3.12.4.4.5	CAPTIVE FASTENERS	3 – 122
3.12.4.4.6	QUICK RELEASE FASTENERS	3 – 122
3.12.4.4.7	THREADED FASTENERS	3 – 122
3.12.4.4.8	OVER CENTER LATCHES	3 – 122
3.12.4.4.9	WINGHEAD FASTENERS	3 – 122
3.12.4.4.10	DELETED	3 – 122
3.12.4.4.11	FASTENER HEAD TYPE	3 – 122
3.12.4.4.12	ONE-HANDED ACTUATION	3 – 123
3.12.4.4.13	DELETED	3 – 123
3.12.4.4.14	ACCESS HOLES	3 – 123
3.12.5	CONTROLS AND DISPLAYS	3 – 123
3.12.5.1	CONTROLS SPACING DESIGN REQUIREMENTS	3 – 123
3.12.5.2	ACCIDENTAL ACTUATION	3 – 123
3.12.5.2.1	PROTECTIVE METHODS	3 – 123
3.12.5.2.2	NONINTERFERENCE	3 – 125
3.12.5.2.3	DEAD-MAN CONTROLS	3 – 125
3.12.5.2.4	BARRIER GUARDS	3 – 126
3.12.5.2.5	RECESSED SWITCH PROTECTION	3 – 126
3.12.5.2.6	DELETED	3 – 126
3.12.5.2.7	POSITION INDICATION	3 – 126
3.12.5.2.8	HIDDEN CONTROLS	3 – 126
3.12.5.2.9	HAND CONTROLLERS	3 – 126
3.12.5.3	VALVE CONTROLS	3 – 126
3.12.5.4	TOGGLE SWITCHES	3 – 128
3.12.6	RESTRAINTS AND MOBILITY AIDS	3 – 128
3.12.6.1	STOWAGE DRAWER CONTENTS RESTRAINTS	3 – 128
3.12.6.2	STOWAGE AND EQUIPMENT DRAWERS/TRAYS	3 – 130
3.12.6.3	CAPTIVE PARTS	3 – 130
3.12.6.4	HANDLE AND GRASP AREA DESIGN REQUIREMENTS	3 – 130
3.12.6.4.1	HANDLES AND RESTRAINTS	3 – 130
3.12.6.4.2	DELETED	3 – 130
3.12.6.4.3	HANDLE LOCATION/FRONT ACCESS	3 – 130
3.12.6.4.4	HANDLE DIMENSIONS	3 – 130

TABLE OF CONTENTS (Continued)

PARAGRAPH		PAGE
3.12.6.4.5	NON-FIXED HANDLES DESIGN REQUIREMENTS	3 – 132
3.12.7	IDENTIFICATION LABELING	3 – 132
3.12.7.1	DELETED	3 – 132
3.12.7.2	DELETED	3 – 132
3.12.7.3	DELETED	3 – 132
3.12.7.4	DELETED	3 – 132
3.12.7.5	DELETED	3 – 132
3.12.7.5.1	DELETED	3 – 132
3.12.7.5.2	DELETED	3 – 132
3.12.7.5.3	DELETED	3 – 133
3.12.7.5.4	DELETED	3 – 133
3.12.7.5.5	DELETED	3 – 133
3.12.7.5.6	DELETED	3 – 133
3.12.7.5.7	DELETED	3 – 134
3.12.7.5.7.1	DELETED	3 – 134
3.12.7.5.8	DELETED	3 – 134
3.12.7.5.9	DELETED	3 – 134
3.12.7.5.10	DELETED	3 – 135
3.12.7.5.11	DELETED	3 – 135
3.12.7.5.12	DELETED	3 – 136
3.12.7.5.13	DELETED	3 – 136
3.12.7.6	DELETED	3 – 136
3.12.8	COLOR	3 – 136
3.12.9	CREW SAFETY	3 – 137
3.12.9.1	ELECTRICAL HAZARDS	3 – 137
3.12.9.1.1	MISMATCHED	3 – 137
3.12.9.1.2	DELETED	3 – 138
3.12.9.1.3	DELETED	3 – 138
3.12.9.1.4	OVERLOAD PROTECTION	3 – 138
3.12.9.1.4.1	DEVICE ACCESSIBILITY	3 – 138
3.12.9.1.4.2	EXTRACTOR –TYPE FUSE HOLDER	3 – 138
3.12.9.1.4.3	OVERLOAD PROTECTION LOCATION	3 – 138
3.12.9.1.4.4	OVERLOAD PROTECTION IDENTIFICATION	3 – 138
3.12.9.1.4.5	AUTOMATIC RESTART PROTECTION	3 – 138
3.12.9.1.5	DELETED	3 – 139
3.12.9.1.5.1	DELETED	3 – 139
3.12.9.2	SHARP EDGES AND CORNERS PROTECTION	3 – 139
3.12.9.3	HOLES	3 – 139
3.12.9.4	LATCHES	3 – 139
3.12.9.5	SCREWS AND BOLTS	3 – 139
3.12.9.6	SECURING PINS	3 – 139
3.12.9.7	LEVERS, CRANKS, HOOKS, AND CONTROLS	3 – 139
3.12.9.8	BURRS	3 – 139

TABLE OF CONTENTS (Continued)

PARAGRAPH		PAGE
3.12.9.9	LOCKING WIRES	3 – 140
3.12.9.10	AUDIO DEVICES (DISPLAYS)	3 – 140
3.12.9.11	DELETED	3 – 140
3.12.9.12	EGRESS	3 – 140
3.12.10	PAYLOAD IN-FLIGHT MAINTENANCE	3 – 140
3.12.11	DELETED	3 – 140
4.0	VERIFICATION	4 – 1
4.1	RESPONSIBILITIES	4 – 1
4.2	VERIFICATION METHODS	4 – 1
4.3	INTERFACE VERIFICATION METHODS	4 – 2
4.3.1	STRUCTURAL/MECHANICAL AND MICROGRAVITY AND STOWAGE INTERFACE REQUIREMENTS	4 – 2
4.3.1.1	STRUCTURAL/MECHANICAL	4 – 2
4.3.1.1.1	GSE INTERFACES	4 – 2
4.3.1.1.2	MPLM INTERFACES	4 – 2
4.3.1.1.2.1	MPLM LATE / EARLY ACCESS REQUIREMENTS	4 – 3
4.3.1.1.2.1.1	MPLM LATE ACCESS ENVELOPE (KSC)	4 – 3
4.3.1.1.2.1.2	MPLM EARLY ACCESS ENVELOPES (KSC AND DFRC)	4 – 3
4.3.1.1.3	LOADS REQUIREMENTS	4 – 4
4.3.1.1.4	RACK REQUIREMENTS	4 – 4
4.3.1.1.4.1	LAB WINDOW RACK LOCATION REQUIREMENTS	4 – 5
4.3.1.1.5	SAFETY CRITICAL STRUCTURES REQUIREMENTS	4 – 6
4.3.1.1.6	CONNECTOR AND UMBILICAL PHYSICAL MATE	4 – 6
4.3.1.1.6.1	CONNECTOR PHYSICAL MATE	4 – 6
4.3.1.1.6.2	UMBILICAL PHYSICAL MATE	4 – 6
4.3.1.1.7	ON ORBIT PAYLOAD PROTRUSIONS	4 – 7
4.3.1.1.7.1	ON–ORBIT PERMANENT PROTRUSIONS	4 – 7
4.3.1.1.7.2	ON–ORBIT SEMI–PERMANENT PROTRUSIONS	4 – 7
4.3.1.1.7.3	ON–ORBIT TEMPORARY PROTRUSIONS	4 – 8
4.3.1.1.7.4	ON–ORBIT MOMENTARY PROTRUSIONS	4 – 8
4.3.1.1.7.5	ON–ORBIT PROTRUSIONS FOR KEEP ALIVE PAYLOADS	4 – 8
4.3.1.2	MICROGRAVITY	4 – 9
4.3.1.2.1	QUASI-STEADY REQUIREMENTS	4 – 9
4.3.1.2.2	VIBRATORY REQUIREMENTS	4 – 9
4.3.1.2.3	TRANSIENT REQUIREMENTS	4 – 9
4.3.1.2.4	MICROGRAVITY ENVIRONMENT REQUIREMENTS	4 – 9
4.3.1.2.5	ARIS REQUIREMENTS	4 – 9
4.3.1.3	STOWAGE	4 – 9
4.3.2	ELECTRICAL INTERFACE REQUIREMENTS	4 – 9
4.3.2.1	ELECTRICAL POWER CHARACTERISTICS	4 – 10
4.3.2.1.1	STEADY-STATE VOLTAGE CHARACTERISTICS	4 – 10
4.3.2.1.1.1	INTERFACE B	4 – 10
4.3.2.1.1.2	INTERFACE C	4 – 10

TABLE OF CONTENTS (Continued)

PARAGRAPH		PAGE
4.3.2.1.2	RIPPLE VOLTAGE CHARACTERISTICS	4 – 10
4.3.2.1.2.1	RIPPLE VOLTAGE AND NOISE	4 – 11
4.3.2.1.2.2	RIPPLE VOLTAGE SPECTRUM	4 – 11
4.3.2.1.3	TRANSIENT VOLTAGES	4 – 11
4.3.2.1.3.1	INTERFACE B	4 – 11
4.3.2.1.3.2	INTERFACE C	4 – 11
4.3.2.1.3.3	FAULT CLEARING AND PROTECTION	4 – 12
4.3.2.1.3.4	NON-NORMAL VOLTAGE RANGE	4 – 12
4.3.2.1.4	DELETE	4 – 12
4.3.2.2	ELECTRICAL POWER INTERFACE	4 – 12
4.3.2.2.1	UIP AND UOP CONNECTORS AND PIN ASSIGNMENTS	4 – 12
4.3.2.2.2	POWER BUS ISOLATION	4 – 13
4.3.2.2.3	COMPATIBILITY WITH SOFT START/STOP RPC	4 – 13
4.3.2.2.4	SURGE CURRENT	4 – 14
4.3.2.2.5	REVERSE CURRENT	4 – 14
4.3.2.2.6	CIRCUIT PROTECTION DEVICES	4 – 15
4.3.2.2.6.1	ISS EPS CIRCUIT PROTECTION CHARACTERISTICS	4 – 15
4.3.2.2.6.1.1	REMOTE POWER CONTROLLERS (RPCS)	4 – 15
4.3.2.2.6.2	EPCE RPC INTERFACE REQUIREMENTS	4 – 16
4.3.2.2.6.2.1	RPC TRIP COORDINATION	4 – 16
4.3.2.2.6.2.1.1	PAYLOAD TRIP RATINGS	4 – 16
4.3.2.2.6.2.1.2	DELETED	4 – 16
4.3.2.2.7	EPCE COMPLEX LOAD IMPEDANCES	4 – 16
4.3.2.2.7.1	INTERFACE B	4 – 17
4.3.2.2.7.2	INTERFACE C	4 – 17
4.3.2.2.8	LARGE SIGNAL STABILITY	4 – 18
4.3.2.2.9	MAXIMUM RIPPLE VOLTAGE EMISSIONS	4 – 21
4.3.2.2.10	ELECTRICAL LOAD-STAND ALONE STABILITY	4 – 21
4.3.2.3	ELECTRICAL POWER CONSUMER CONSTRAINTS	4 – 21
4.3.2.3.1	WIRE DERATING	4 – 22
4.3.2.3.2	EXCLUSIVE POWER FEEDS	4 – 22
4.3.2.3.3	LOSS OF POWER	4 – 22
4.3.2.4	ELECTROMAGNETIC COMPATIBILITY	4 – 23
4.3.2.4.1	ELECTRICAL GROUNDING	4 – 24
4.3.2.4.2	ELECTRICAL BONDING	4 – 24
4.3.2.4.3	CABLE/WIRE DESIGN AND CONTROL REQUIREMENTS	4 – 24
4.3.2.4.4	ELECTROMAGNETIC INTERFERENCE	4 – 24
4.3.2.4.5	ELECTROSTATIC DISCHARGE	4 – 25
4.3.2.4.6	ALTERNATING CURRENT (AC) MAGNETIC FIELDS	4 – 25
4.3.2.4.7	DIRECT CURRENT (DC) MAGNETIC FIELDS	4 – 26
4.3.2.4.8	CORONA (TBR #6)	4 – 26
4.3.2.4.9	LIGHTNING	4 – 27
4.3.2.4.10	EMI SUSCEPTIBILITY FOR SAFETY-CRITICAL CIRCUITS	4 – 27

TABLE OF CONTENTS (Continued)

PARAGRAPH		PAGE
4.3.2.5	SAFETY REQUIREMENTS	4 – 27
4.3.2.5.1	PAYLOAD ELECTRICAL SAFETY	4 – 27
4.3.2.5.1.1	MATING/DEMATING OF POWERED CONNECTORS	4 – 27
4.3.2.5.1.2	SAFETY-CRITICAL CIRCUITS REDUNDANCY	4 – 27
4.3.2.5.2	RACK MAINTENANCE SWITCH (RACK POWER SWITCH)	4 – 27
4.3.2.5.3	POWER SWITCHES/CONTROLS	4 – 28
4.3.2.5.4	GROUND FAULT CIRCUIT INTERRUPTERS/PORTABLE EQUIPMENT DC SOURCING VOLTAGE	4 – 28
4.3.2.5.5	PORTABLE EQUIPMENT/POWER CORDS	4 – 30
4.3.2.5.6	DELETED	4 – 30
4.3.2.6	MPLM	4 – 30
4.3.2.6.1	MPLM ELECTRICAL POWER CHARACTERISTICS	4 – 30
4.3.2.6.2	MPLM ELECTRICAL POWER INTERFACE	4 – 31
4.3.2.6.2.1	MPLM UIP CONNECTORS AND PIN ASSIGNMENTS	4 – 31
4.3.2.6.2.1.1	PAYLOAD TRIP RATINGS	4 – 32
4.3.2.6.2.2	COMPATIBILITY WITH RPC SOFT START/STOP IN MPLM	4 – 32
4.3.2.6.2.3	MPLM SURGE CURRENT	4 – 32
4.3.2.6.2.4	MPLM REVERSE ENERGY/CURRENT	4 – 33
4.3.2.6.2.5	MPLM PAYLOAD TRIP RATINGS	4 – 33
4.3.2.6.3	MPLM ELECTRICAL POWER CONSUMER CONSTRAINTS	4 – 33
4.3.2.6.4	MPLM ELECTROMAGNETIC COMPATIBILITY	4 – 34
4.3.2.6.4.1	MPLM BONDING	4 – 34
4.3.2.6.5	MPLM SAFETY REQUIREMENTS	4 – 34
4.3.3	COMMAND AND DATA HANDLING INTERFACE VERIFICATION REQUIREMENTS	4 – 35
4.3.3.1	GENERAL REQUIREMENTS	4 – 35
4.3.3.2	WORD/BYTE NOTATIONS, TYPES AND DATA TRANSMISSIONS	4 – 35
4.3.3.2.1	WORD/BYTE NOTATIONS	4 – 35
4.3.3.2.2	DATA TYPES	4 – 35
4.3.3.2.3	DATA TRANSMISSIONS	4 – 36
4.3.3.3	DELETED	4 – 36
4.3.3.4	CONSULTATIVE COMMITTEE FOR SPACE DATA SYSTEMS	4 – 36
4.3.3.4.1	CCSDS DATA	4 – 36
4.3.3.4.1.1	CCSDS DATA PACKETS	4 – 37
4.3.3.4.1.1.1	CCSDS PRIMARY HEADER	4 – 37
4.3.3.4.1.1.2	CCSDS SECONDARY HEADER	4 – 37
4.3.3.4.1.2	CCSDS DATA FIELD	4 – 37
4.3.3.4.1.3	CCSDS DATA BITSTREAM	4 – 38
4.3.3.4.1.4	CCSDS APID FIELD	4 – 38
4.3.3.4.2	CCSDS TIME CODES	4 – 38
4.3.3.4.2.1	CCSDS UNSEGMENTED TIME	4 – 38
4.3.3.4.2.2	CCSDS SEGMENTED TIME	4 – 38
4.3.3.5	MIL-STD-1553B LRDL	4 – 38

TABLE OF CONTENTS (Continued)

PARAGRAPH		PAGE
4.3.3.5.1	MIL-STD-1553B PROTOCOL	4 – 39
4.3.3.5.1.1	STANDARD MESSAGES	4 – 39
4.3.3.5.1.2	COMMANDING	4 – 39
4.3.3.5.1.3	HEALTH AND STATUS DATA	4 – 39
4.3.3.5.1.4	SAFETY DATA	4 – 40
4.3.3.5.1.4.1	CAUTION AND WARNING	4 – 40
4.3.3.5.1.4.1.1	CLASS 1 – EMERGENCY	4 – 40
4.3.3.5.1.4.1.2	CLASS 2 – WARNING	4 – 40
4.3.3.5.1.4.1.3	CLASS 3 – CAUTION	4 – 41
4.3.3.5.1.4.1.4	CLASS 4 – ADVISORY	4 – 41
4.3.3.5.1.5	SERVICE REQUESTS	4 – 41
4.3.3.5.1.6	ANCILLARY DATA	4 – 42
4.3.3.5.1.7	FILE TRANSFER	4 – 42
4.3.3.5.1.8	LOW RATE TELEMETRY	4 – 42
4.3.3.5.1.9	DEFINED MODE CODES	4 – 42
4.3.3.5.1.10	IMPLEMENTED MODE CODES	4 – 42
4.3.3.5.1.11	UNIMPLEMENTED/UNDEFINED MODE CODES	4 – 43
4.3.3.5.1.12	ILLEGAL COMMANDS	4 – 43
4.3.3.5.2	MIL–STD–1553B LRDL INTERFACE CHARACTERISTICS	4 – 43
4.3.3.5.2.1	LRDL REMOTE TERMINAL ASSIGNMENT	4 – 43
4.3.3.5.2.1.1	LRDL CONNECTOR/PIN ASSIGNMENTS	4 – 44
4.3.3.5.2.1.2	MIL–STD–1553B BUS A AND B CONNECTOR/PIN ASSIGNMENT	4 – 44
4.3.3.5.2.1.3	DELETED	4 – 44
4.3.3.5.2.1.4	REMOTE TERMINAL HARDWIRED ADDRESS CODING	4 – 44
4.3.3.5.2.2	LRDL SIGNAL CHARACTERISTICS	4 – 44
4.3.3.5.2.3	LRDL CABLING	4 – 45
4.3.3.5.2.4	MULTI–BUS ISOLATION	4 – 45
4.3.3.6	MEDIUM RATE DATA LINK (MRDL)	4 – 45
4.3.3.6.1	MRDL PROTOCOL	4 – 45
4.3.3.6.1.1	INTEGRATED RACK PROTOCOLS ON THE MRDL	4 – 46
4.3.3.6.1.2	MRDL ADDRESS	4 – 46
4.3.3.6.1.3	ISPR MRDL CONNECTIVITY	4 – 46
4.3.3.6.1.4	MRDL CONNECTOR/PIN ASSIGNMENTS	4 – 47
4.3.3.6.1.4.1	DELETED	4 – 47
4.3.3.6.1.4.2	DELETED	4 – 47
4.3.3.6.1.5	MRDL SIGNAL CHARACTERISTICS	4 – 47
4.3.3.6.1.6	MRDL CABLE CHARACTERISTICS	4 – 48
4.3.3.6.1.6.1	INSERTION LOSS	4 – 48
4.3.3.6.1.6.2	DIFFERENTIAL CHARACTERISTIC IMPEDANCE	4 – 48
4.3.3.6.1.6.3	MEDIUM TIMING JITTER	4 – 48
4.3.3.7	HIGH RATE DATA LINK (HRDL)	4 – 48
4.3.3.7.1	PAYLOAD HRFM PROTOCOLS	4 – 48
4.3.3.7.2	HRDL INTERFACE CHARACTERISTICS	4 – 49

TABLE OF CONTENTS (Continued)

PARAGRAPH		PAGE
4.3.3.7.2.1	PHYSICAL SIGNALING	4 – 49
4.3.3.7.2.1.1	PHYSICAL SIGNALING DATE RATES	4 – 49
4.3.3.7.2.2	ENCODING	4 – 49
4.3.3.7.2.3	SYMBOLS USED IN TESTING	4 – 50
4.3.3.7.3	INTEGRATED RACK HRDL OPTICAL POWER	4 – 50
4.3.3.7.3.1	INTEGRATED RACK HRDL TRANSMITTED OPTICAL POWER	4 – 50
4.3.3.7.3.2	INTEGRATED RACK HRDL RECEIVED OPTICAL POWER	4 – 50
4.3.3.7.4	HRDL FIBER OPTIC CABLE	4 – 50
4.3.3.7.5	HRDL FIBER OPTIC CABLE BEND RADIUS	4 – 50
4.3.3.7.6	HRDL CONNECTORS AND FIBER	4 – 51
4.3.3.7.7	DELETED	4 – 51
4.3.3.8	PERSONAL COMUPTERS	4 – 51
4.3.3.8.1	PAYLOAD LAPTOP	4 – 51
4.3.3.8.2	PCS	4 – 51
4.3.3.8.2.1	PCS TO UOP INTERFACE	4 – 52
4.3.3.8.2.2	760XD LAPTOP TO RACK INTERFACE	4 – 52
4.3.3.8.3	SSC	4 – 52
4.3.3.9	UOP	4 – 52
4.3.3.10	MAINTENANCE SWITCH, SMOKE DETECTOR, SMOKE INDICATOR, AND INTEGRATED RACK FAN INTERFACES	4 – 52
4.3.3.10.1	RACK MAINTENANCE SWITCH (RACK POWER SWITCH) INTERFACES	4 – 53
4.3.3.10.2	SMOKE DETECTOR INTERFACES	4 – 53
4.3.3.10.2.1	ANALOG INTERFACE CHARACTERISTICS	4 – 53
4.3.3.10.2.2	DISCRETE COMMAND BUILT-IN-TEST INTERFACE CHARACTERISTICS	4 – 53
4.3.3.10.2.3	SMOKE INDICATOR ELECTRICAL INTERFACES	4 – 53
4.3.3.10.2.4	FAN VENTILATION STATUS ELECTRICAL INTERFACES	4 – 54
4.3.3.10.3	RACK MAINTENANCE SWITCH (RACK POWER SWITCH)/FIRE DETECTION SUPPORT INTERFACE CONNECTOR	4 – 54
4.3.4	PAYLOAD NTSC VIDEO AND AUDIO INTERFACE REQUIREMENTS	4 – 54
4.3.4.1	PAYLOAD NTSC VIDEO INTERFACE REQUIREMENTS	4 – 54
4.3.4.1.1	PAYLOAD NTSC VIDEO SIGNAL CHARACTERISTICS	4 – 54
4.3.4.1.2	NTSC FIBER OPTIC VIDEO	4 – 55
4.3.4.1.2.1	PAYLOAD NTSC VIDEO CHARACTERISTICS	4 – 55
4.3.4.1.2.2	INTEGRATED RACK NTSC PFM VIDEO TRANSMITTED OPTICAL POWER	4 – 55
4.3.4.1.2.3	INTEGRATED RACK NTSC PFM VIDEO AND SYNC SIGNAL RECEIVED OPTICAL POWER	4 – 55
4.3.4.1.2.4	NTSC ELECTRICAL VIDEO CHARACTERISTICS	4 – 55
4.3.4.1.2.5	PFM NTSC VIDEO FIBER OPTIC CABLE BEND RADIUS	4 – 55
4.3.4.1.2.6	DELETED	4 – 56
4.3.4.1.2.7	PFM NTSC OPTICAL CONNECTOR/PIN ASSIGNMENTS	4 – 56

TABLE OF CONTENTS (Continued)

PARAGRAPH		PAGE
4.3.4.1.3	NTSC ELECTRICAL VIDEO INTERFACES	4 – 56
4.3.4.1.3.1	NTSC ELECTRICAL VIDEO CHARACTERISTICS	4 – 56
4.3.4.1.3.2	DELETED	4 – 56
4.3.4.1.4	NTSC ELECTRICAL CONNECTOR/PIN ASSIGNMENTS	4 – 56
4.3.4.2	U.S. ELEMENT AUDIO INTERFACE REQUIREMENTS	4 – 56
4.3.5	THERMAL CONTROL INTERFACE REQUIREMENTS	4 – 57
4.3.5.1	INTERNAL THERMAL CONTROL SYSTEM (ITCS) INTERFACE REQUIREMENTS	4 – 57
4.3.5.1.1	PHYSICAL INTERFACE	4 – 57
4.3.5.1.2	ITCS FLUID USE AND CHARGING	4 – 57
4.3.5.1.3	ITCS PRESSURE DROP	4 – 57
4.3.5.1.4	COOLANT FLOW RATE	4 – 57
4.3.5.1.5	COOLANT SUPPLY TEMPERATURE	4 – 58
4.3.5.1.6	COOLANT RETURN TEMPERATURE	4 – 58
4.3.5.1.7	COOLANT MAXIMUM DESIGN PRESSURE	4 – 59
4.3.5.1.8	FAIL SAFE DESIGN	4 – 59
4.3.5.1.9	LEAKAGE	4 – 59
4.3.5.1.10	QUICK-DISCONNECT AIR INCLUSION	4 – 60
4.3.5.1.11	RACK FRONT SURFACE TEMPERATURE	4 – 60
4.3.5.1.12	CABIN AIR HEAT LEAK	4 – 60
4.3.5.1.13	MPLM CABIN AIR COOLING	4 – 60
4.3.5.1.14	SIMULTANEOUS COOLING	4 – 61
4.3.5.1.15	CONTROL SYSTEM TIME CONSTANT	4 – 61
4.3.5.1.16	PAYLOAD COOLANT QUANTITY	4 – 61
4.3.5.1.17	PAYLOAD GAS INCLUSION	4 – 61
4.3.6	VACUUM SYSTEM REQUIREMENTS	4 – 61
4.3.6.1	VACUUM EXHAUST SYSTEM REQUIREMENTS	4 – 61
4.3.6.1.1	VES PHYSICAL INTERFACE	4 – 61
4.3.6.1.2	INPUT PRESSURE LIMIT	4 – 62
4.3.6.1.3	INPUT TEMPERATURE LIMIT	4 – 62
4.3.6.1.4	INPUT DEWPOINT LIMIT	4 – 62
4.3.6.1.5	ACCEPTABLE EXHAUST GASES (TBR #7)	4 – 62
4.3.6.1.5.1	ACCEPTABLE GASES – INITIAL LIST	4 – 66
4.3.6.1.5.2	EXTERNAL CONTAMINATION CONTROL	4 – 66
4.3.6.1.5.3	INCOMPATIBLE GASES	4 – 66
4.3.6.2	VACUUM RESOURCE SYSTEM REQUIREMENTS	4 – 66
4.3.6.2.1	VRS PHYSICAL INTERFACE	4 – 66
4.3.6.2.2	INPUT PRESSURE LIMIT	4 – 66
4.3.6.2.3	VRS THROUGH-PUT LIMIT	4 – 66
4.3.6.2.4	ACCEPTABLE EXHAUST GASES	4 – 66
4.3.7	PRESSURIZED GASES INTERFACE VERIFICATION REQUIREMENTS	4 – 67
4.3.7.1	NITROGEN INTERFACE VERIFICATION REQUIREMENTS	4 – 67

TABLE OF CONTENTS (Continued)

PARAGRAPH		PAGE
4.3.7.1.1	NITROGEN INTERFACE CONTROL	4 – 67
4.3.7.1.2	NITROGEN INTERFACE PRESSURE	4 – 67
4.3.7.1.3	NITROGEN INTERFACE TEMPERATURE	4 – 67
4.3.7.1.4	NITROGEN LEAKAGE	4 – 67
4.3.7.1.5	NITROGEN INTERFACE CONNECTION	4 – 67
4.3.7.2	ARGON INTERFACE VERIFICATION REQUIREMENTS	4 – 68
4.3.7.2.1	ARGON INTERFACE CONTROL	4 – 68
4.3.7.2.2	ARGON INTERFACE MDP	4 – 68
4.3.7.2.3	ARGON INTERFACE TEMPERATURE	4 – 68
4.3.7.2.4	ARGON LEAKAGE	4 – 68
4.3.7.2.5	ARGON INTERFACE CONNECTION	4 – 68
4.3.7.3	CARBON DIOXIDE INTERFACE VERIFICATION REQUIREMENTS	4 – 68
4.3.7.3.1	CARBON DIOXIDE INTERFACE CONTROL	4 – 68
4.3.7.3.2	CARBON DIOXIDE INTERFACE PRESSURE	4 – 69
4.3.7.3.3	CARBON DIOXIDE INTERFACE TEMPERATURE	4 – 69
4.3.7.3.4	CARBON DIOXIDE LEAKAGE	4 – 69
4.3.7.3.5	CARBON DIOXIDE INTERFACE CONNECTION	4 – 69
4.3.7.4	HELIUM INTERFACE VERIFICATION REQUIREMENTS	4 – 69
4.3.7.4.1	HELIUM INTERFACE CONTROL	4 – 69
4.3.7.4.2	HELIUM INTERFACE MDP	4 – 70
4.3.7.4.3	HELIUM INTERFACE TEMPERATURE	4 – 70
4.3.7.4.4	HELIUM LEAKAGE	4 – 70
4.3.7.4.5	HELIUM INTERFACE CONNECTION	4 – 70
4.3.7.5	PRESSURIZED GAS BOTTLES	4 – 70
4.3.7.6	MANUAL VALVES	4 – 71
4.3.8	PAYLOAD SUPPORT SERVICES INTERFACES VERIFICATION REQUIREMENTS	4 – 71
4.3.8.1	POTABLE WATER	4 – 71
4.3.8.1.1	POTABLE WATER INTERFACE CONNECTION	4 – 71
4.3.8.1.2	POTABLE WATER INTERFACE PRESSURE	4 – 71
4.3.8.1.3	POTABLE WATER USE	4 – 71
4.3.8.2	FLUID SYSTEM SERVICER	4 – 72
4.3.9	ENVIRONMENT INTERFACE VERIFICATION REQUIREMENTS	4 – 72
4.3.9.1	ATMOSPHERE REQUIREMENTS	4 – 72
4.3.9.1.1	PRESSURE	4 – 72
4.3.9.1.2	TEMPERATURE	4 – 72
4.3.9.1.3	HUMIDITY	4 – 72
4.3.9.2	INTEGRATED RACK USE OF CABIN ATMOSPHERE	4 – 72
4.3.9.2.1	ACTIVE AIR EXCHANGE	4 – 72
4.3.9.2.2	OXYGEN CONSUMPTION	4 – 73
4.3.9.2.3	CHEMICAL RELEASES	4 – 73
4.3.9.3	IONIZING RADIATION REQUIREMENTS	4 – 73

TABLE OF CONTENTS (Continued)

PARAGRAPH		PAGE
4.3.9.3.1	INTEGRATED RACK CONTAINED OR GENERATED IONIZING RADIATION	4 – 73
4.3.9.3.2	IONIZING RADIATION DOSE	4 – 73
4.3.9.3.3	SINGLE EVENT EFFECT (SEE) IONIZING RADIATION DOSE	4 – 73
4.3.9.3.4	LAB WINDOW RACK LOCATION RADIATION REQUIREMENTS	4 – 74
4.3.9.3.4.1	WINDOW RACK INFRARED RADIATION REQUIREMENTS	4 – 74
4.3.9.3.4.2	WINDOW RACK ULTRAVIOLET RADIATION REQUIREMENTS	4 – 74
4.3.9.4	ADDITIONAL ENVIRONMENTAL CONDITIONS	4 – 74
4.3.10	FIRE PROTECTION INTERFACE VERIFICATION REQUIREMENTS	4 – 74
4.3.10.1	FIRE PREVENTION	4 – 74
4.3.10.2	PAYLOAD MONITORING AND DETECTION REQUIREMENTS	4 – 75
4.3.10.2.1	SMOKE DETECTION	4 – 75
4.3.10.2.1.1	SMOKE DETECTOR	4 – 75
4.3.10.2.1.2	FORCED AIR CIRCULATION INDICATION	4 – 75
4.3.10.2.1.3	FIRE DETECTION INDICATOR	4 – 75
4.3.10.2.2	PARAMETER MONITORING	4 – 76
4.3.10.2.2.1	PARAMETER MONITORING USE	4 – 76
4.3.10.2.2.2	PARAMETER MONITORING RESPONSE	4 – 76
4.3.10.2.2.2.2	PARAMETER MONITORING IN INTEGRATED RACK	4 – 77
4.3.10.3	FIRE SUPPRESSION	4 – 77
4.3.10.3.1	PORTABLE FIRE EXTINGUISHER	4 – 77
4.3.10.3.2	FIRE SUPPRESSION ACCESS PORT ACCESSIBILITY	4 – 78
4.3.10.3.3	FIRE SUPPRESSANT DISTRIBUTION	4 – 78
4.3.10.3.4	DELETED	4 – 79
4.3.10.3.4.1	DELETED	4 – 79
4.3.10.3.4.2	DELETED	4 – 79
4.3.10.4	LABELING	4 – 79
4.3.11	MATERIALS AND PARTS INTERFACE VERIFICATION REQUIREMENTS	4 – 79
4.3.11.1	MATERIALS AND PARTS USE AND SELECTION	4 – 79
4.3.11.1.1	COMMERCIAL PARTS	4 – 79
4.3.11.2	FLUIDS	4 – 79
4.3.11.3	CLEANLINESS	4 – 80
4.3.11.4	FUNGUS RESISTANT MATERIAL	4 – 80
4.3.12	HUMAN FACTORS INTERFACE REQUIREMENTS	4 – 80
4.3.12.1	STRENGTH REQUIREMENTS	4 – 80
4.3.12.2	BODY ENVELOPE AND REACH ACCESSIBILITY	4 – 81
4.3.12.2.1	ADEQUATE CLEARANCE	4 – 81
4.3.12.2.2	ACCESSIBILITY	4 – 81
4.3.12.2.3	FULL SIZE RANGE ACCOMMODATION	4 – 82
4.3.12.3	HABITABILITY	4 – 82
4.3.12.3.1	HOUSEKEEPING	4 – 82

TABLE OF CONTENTS (Continued)

PARAGRAPH		PAGE
4.3.12.3.1.1	CLOSURES OR COVERS	4 – 82
4.3.12.3.1.2	BUILT-IN CONTROL	4 – 82
4.3.12.3.1.3	DELETED	4 – 82
4.3.12.3.1.4	DELETED	4 – 82
4.3.12.3.1.5	ONE-HANDED OPERATION	4 – 82
4.3.12.3.1.6	DELETED	4 – 83
4.3.12.3.2	TOUCH TEMPERATURE	4 – 83
4.3.12.3.2.1	CONTINUOUS/INCIDENTAL CONTACT – HIGH TEMPERATURE	4 – 83
4.3.12.3.2.2	CONTINUOUS/INCIDENTAL CONTACT – LOW TEMPERATURE	4 – 83
4.3.12.3.3	ACOUSTIC REQUIREMENTS	4 – 83
4.3.12.3.3.1	CONTINUOUS NOISE LIMITS	4 – 83
4.3.12.3.3.2	INTERMITTENT NOISE LIMITS	4 – 84
4.3.12.3.4	LIGHTING DESIGN	4 – 86
4.3.12.4	STRUCTURAL/MECHANICAL INTERFACES	4 – 87
4.3.12.4.1	DELETED	4 – 87
4.3.12.4.1.1	DELETED	4 – 87
4.3.12.4.2	PAYLOAD HARDWARE MOUNTING	4 – 87
4.3.12.4.2.1	EQUIPMENT MOUNTING	4 – 87
4.3.12.4.2.2	DRAWERS AND HINGED PANELS	4 – 87
4.3.12.4.2.3	DELETED	4 – 87
4.3.12.4.2.4	DELETED	4 – 87
4.3.12.4.2.5	ALIGNMENT	4 – 87
4.3.12.4.2.6	SLIDE-OUT STOPS	4 – 87
4.3.12.4.2.7	PUSH-PULL FORCES	4 – 88
4.3.12.4.2.8	ACCESS	4 – 88
4.3.12.4.2.8.1	COVERS	4 – 88
4.3.12.4.2.8.2	SELF-SUPPORTING COVERS	4 – 88
4.3.12.4.2.8.3	DELETED	4 – 88
4.3.12.4.2.8.4	UNIQUE TOOLS	4 – 88
4.3.12.4.3	CONNECTORS	4 – 89
4.3.12.4.3.1	ONE-HANDED OPERATION	4 – 89
4.3.12.4.3.2	ACCESSIBILITY	4 – 89
4.3.12.4.3.3	EASE OF DISCONNECT	4 – 89
4.3.12.4.3.4	INDICATION OF PRESSURE/FLOW	4 – 90
4.3.12.4.3.5	SELF LOCKING	4 – 90
4.3.12.4.3.6	CONNECTOR ARRANGEMENT	4 – 90
4.3.12.4.3.7	ARC CONTAINMENT	4 – 90
4.3.12.4.3.8	CONNECTOR PROTECTION	4 – 90
4.3.12.4.3.9	CONNECTOR SHAPE	4 – 90
4.3.12.4.3.10	FLUID AND GAS LINE CONNECTORS	4 – 91
4.3.12.4.3.11	ALIGNMENT MARKS OR GUIDE PINS	4 – 91
4.3.12.4.3.12	CODING	4 – 91
4.3.12.4.3.13	PIN IDENTIFICATION	4 – 91

TABLE OF CONTENTS (Continued)

PARAGRAPH		PAGE
4.3.12.4.3.14	ORIENTATION	4 – 91
4.3.12.4.3.15	HOSE/CABLE RESTRAINTS	4 – 91
4.3.12.4.4	FASTENERS	4 – 92
4.3.12.4.4.1	NON-THREADED FASTENERS STATUS INDICATION	4 – 92
4.3.12.4.4.2	MOUNTING BOLT/FASTENER SPACING	4 – 92
4.3.12.4.4.3	DELETED	4 – 92
4.3.12.4.4.4	MULTIPLE FASTENERS	4 – 92
4.3.12.4.4.5	CAPTIVE FASTENERS	4 – 92
4.3.12.4.4.6	QUICK RELEASE FASTENERS	4 – 93
4.3.12.4.4.7	THREADED FASTENERS	4 – 93
4.3.12.4.4.8	OVER CENTER LATCHES	4 – 93
4.3.12.4.4.9	WINGHEAD FASTENERS	4 – 93
4.3.12.4.4.10	DELETED	4 – 93
4.3.12.4.4.11	FASTENER HEAD TYPE	4 – 93
4.3.12.4.4.12	ONE-HANDED ACTUATION	4 – 94
4.3.12.4.4.13	DELETED	4 – 94
4.3.12.4.4.14	ACCESS HOLES	4 – 94
4.3.12.5	CONTROLS AND DISPLAYS	4 – 94
4.3.12.5.1	CONTROLS SPACING DESIGN REQUIREMENTS	4 – 94
4.3.12.5.2	ACCIDENTAL ACTUATION	4 – 94
4.3.12.5.2.1	PROTECTIVE METHODS	4 – 94
4.3.12.5.2.2	NONINTERFERENCE	4 – 95
4.3.12.5.2.3	DEAD-MAN CONTROLS	4 – 95
4.3.12.5.2.4	BARRIER GUARDS	4 – 95
4.3.12.5.2.5	RECESSED SWITCH PROTECTION	4 – 95
4.3.12.5.2.6	DELETED	4 – 95
4.3.12.5.2.7	POSITION INDICATION	4 – 95
4.3.12.5.2.8	HIDDEN CONTROLS	4 – 95
4.3.12.5.2.9	HAND CONTROLLERS	4 – 95
4.3.12.5.3	VALVE CONTROLS	4 – 96
4.3.12.5.4	TOGGLE SWITCHES	4 – 96
4.3.12.6	RESTRAINTS AND MOBILITY AIDS	4 – 96
4.3.12.6.1	STOWAGE DRAWER CONTENTS RESTRAINTS	4 – 96
4.3.12.6.2	STOWAGE AND EQUIPMENT DRAWERS/TRAYS	4 – 97
4.3.12.6.3	CAPTIVE PARTS	4 – 97
4.3.12.6.4	HANDLE AND GRASP AREA DESIGN REQUIREMENTS	4 – 97
4.3.12.6.4.1	HANDLES AND RESTRAINTS	4 – 97
4.3.12.6.4.2	DELETED	4 – 98
4.3.12.6.4.3	HANDLE LOCATION/FRONT ACCESS	4 – 98
4.3.12.6.4.4	HANDLE DIMENSIONS	4 – 98
4.3.12.6.4.5	NON-FIXED HANDLES DESIGN REQUIREMENTS	4 – 98
4.3.12.7	IDENTIFICATION LABELING	4 – 98
4.3.12.7.1	DELETED	4 – 99

TABLE OF CONTENTS (Continued)

PARAGRAPH		PAGE
4.3.12.7.2	DELETED	4 – 99
4.3.12.7.3	DELETED	4 – 99
4.3.12.7.4	DELETED	4 – 99
4.3.12.7.5	DELETED	4 – 99
4.3.12.7.5.1	DELETED	4 – 99
4.3.12.7.5.2	DELETED	4 – 99
4.3.12.7.5.3	DELETED	4 – 99
4.3.12.7.5.4	DELETED	4 – 99
4.3.12.7.5.5	DELETED	4 – 100
4.3.12.7.5.6	DELETED	4 – 100
4.3.12.7.5.7	DELETED	4 – 100
4.3.12.7.5.7.1	DELETED	4 – 100
4.3.12.7.5.8	DELETED	4 – 101
4.3.12.7.5.9	DELETED	4 – 101
4.3.12.7.5.10	DELETED	4 – 101
4.3.12.7.5.11	DELETED	4 – 101
4.3.12.7.5.12	DELETED	4 – 101
4.3.12.7.5.13	DELETED	4 – 101
4.3.12.7.6	DELETED	4 – 101
4.3.12.8	COLOR	4 – 102
4.3.12.9	CREW SAFETY	4 – 102
4.3.12.9.1	ELECTRICAL HAZARDS	4 – 102
4.3.12.9.1.1	MISMATCHED	4 – 103
4.3.12.9.1.2	DELETED	4 – 103
4.3.12.9.1.3	OVERLOAD PROTECTION	4 – 103
4.3.12.9.1.3.1	DEVICE ACCESSIBILITY	4 – 103
4.3.12.9.1.3.2	EXTRACTOR –TYPE FUSE HOLDER	4 – 103
4.3.12.9.1.3.3	OVERLOAD PROTECTION LOCATION	4 – 103
4.3.12.9.1.3.4	OVERLOAD PROTECTION IDENTIFICATION	4 – 104
4.3.12.9.1.3.5	AUTOMATIC RESTART PROTECTION	4 – 104
4.3.12.9.1.4	DELETED	4 – 104
4.3.12.9.1.4.1	DELETED	4 – 104
4.3.12.9.2	SHARP EDGES AND CORNERS PROTECTION	4 – 104
4.3.12.9.3	HOLES	4 – 104
4.3.12.9.4	LATCHES	4 – 104
4.3.12.9.5	SCREWS AND BOLTS	4 – 105
4.3.12.9.6	SECURING PINS	4 – 105
4.3.12.9.7	LEVERS, CRANKS, HOOKS, AND CONTROLS	4 – 105
4.3.12.9.8	BURRS	4 – 105
4.3.12.9.9	LOCKING WIRES	4 – 105
4.3.12.9.10	AUDIO DEVICES (DISPLAYS)	4 – 105
4.3.12.9.11	DELETED	4 – 106
4.3.12.9.12	EGRESS	4 – 106

TABLE OF CONTENTS (Continued)

PARAGRAPH		PAGE
4.3.12.10	PAYLOAD IN-FLIGHT MAINTENANCE	4 – 106

APPENDICES

4.3.12.11	DELETED	4 – 106
A	ABBREVIATIONS AND ACRONYMS	A – 1
B	GLOSSARY OF TERMS	B – 1
C	INSTRUCTIONS FOR LABELS AND DECALS	C – 1
C.1	INTRODUCTION	C – 1
C.2	RESPONSIBILITIES	C – 1
C.3	FCSD APPROVAL INSTRUCTIONS	C – 2
C.3.1	GROUND ASSEMBLY AND HANDLING	C – 4
C.3.2	FUNCTION CONSIDERATIONS	C – 4
C.3.3	PAYLOAD ORIENTATION	C – 4
C.3.4	DELETED (MOVED TO C.3.5.4.1)	C – 4
C.3.5	LABELING DESIGN	C – 4
C.3.5.1	LABELING STANDARDIZATION	C – 4
C.3.5.2	READABILITY	C – 5
C.3.5.3	LABEL PLACEMENT	C – 6
C.3.5.4	EQUIPMENT LABELING	C – 10
C.3.5.4.1	EQUIPMENT INDENTIFICATION	C – 10
C.3.5.4.2	EQUIPMENT CODING	C – 11
C.3.5.4.2.1	UTILITY CODING	C – 11
C.3.5.4.2.2	COLOR CODING	C – 13
C.3.5.5	LOCATION AND ORIENTATION	C – 14
C.3.5.5.1	LOCATION CODING	C – 14
C.3.5.5.2	ALIGNMENT MARKS/INTERFACE IDENTIFICATION	C – 15
C.3.5.6	OPERATING INSTRUCTION	C – 15
C.3.5.7	STOWAGE CONTAINER LABELING	C – 16
C.3.5.8	GROUPED EQUIPMENT ITEMS	C – 16
C.3.5.9	CAUTION AND WARNING LABELS	C – 17
C.3.5.10	ALPHANUMERIC	C – 20
C.3.5.10.1	FONT STYLE	C – 20
C.3.5.10.2	PUNCTUATION	C – 21
C.3.5.10.3	SPECIAL CHARACTER	C – 21
C.3.5.10.4	CHARACTER HEIGHT	C – 22
C.3.5.10.5	CHARACTER WIDTH	C – 23
C.3.5.10.6	STROKE WIDTH	C – 23
C.3.5.10.7	CHARACTER MEASUREMENT	C – 23
C.3.5.10.8	SPACE	C – 24
C.3.5.11	BAR CODING	C – 24
C.3.6	DELETED (INCORPORATED INTO C.3.5.4.2.2)	C – 25

TABLE OF CONTENTS (Continued)

PARAGRAPH		PAGE
C.3.7	SCALE MARKING	C – 25
D	EXHAUST GASES COMPATIBLE WITH THE ISS VES/WGS WETTED MATERIALS	D – 1
E	EXCEPTIONS AND OPEN ITEMS	E – 1
E.1	TO BE DETERMINED ITEMS	E – 1
E.2	TO BE RESOLVED ITEMS	E – 2

TABLE OF CONTENTS (Continued)

TABLES

TABLE		PAGE
3.1.1.3–1	CREW-INDUCED LOADS	3 – 8
3.1.1.3–2	RANDOM VIBRATION CRITERIA FOR ISPR POST-MOUNTED EQUIPMENT WEIGHING 100 POUNDS OR LESS IN THE MPLM	3 – 8
3.1.1.3–3	RANDOM VIBRATION CRITERIA FOR ISPR POST-MOUNTED EQUIPMENT WEIGHING MORE THAN 100 POUNDS IN THE MPLM	3 – 9
3.1.1.3–4	PAYLOAD ISPR MOUNTED EQUIPMENT LOAD FACTORS (EQUIPMENT FREQUENCY 35 HZ)	3 – 9
3.1.1.6.1–1	MODULE CONNECTORS	3 – 13
3.2.2.5–1	MAXIMUM REVERSE ENERGY/CURRENT FROM DOWNSTREAM LOADS	3 – 29
3.2.5.4–1	LET-GO CURRENT PROFILE THRESHOLD VERSUS FREQUENCY	3 – 43
3.3.5.2.1.4–1	REMOTE TERMINAL HARDWIRED ADDRESS CODING FOR STANDARD PAYLOAD BUS	3 – 57
3.3.5.2.3–1	MIL–STD–1553B NETWORK CHARACTERISTICS	3 – 59
3.3.6.1.6–1	LINK SEGMENT CABLE CHARACTERISTICS	3 – 61
3.3.8.1–1	RACK CONNECTOR PART NUMBERS	3 – 65
3.3.10.1–1	BI-LEVEL DATA CHARACTERISTICS (SWITCH CONTACT)	3 – 68
3.3.10.2.1–1	ELECTRICAL CHARACTERISTICS ENVELOPE OF ANALOG SIGNALS	3 – 69
3.3.10.2.2–1	ELECTRICAL CHARACTERISTICS OF THE BIT INTERFACE	3 – 69
3.3.10.2.3–1	SMOKE INDICATOR INTERFACE CHARACTERISTICS	3 – 70
3.4.1.1–1	NTSC VIDEO PERFORMANCE CHARACTERISTICS	3 – 72
3.4.1.2–1	NTSC FIBER OPTIC VIDEO SIGNAL CHARACTERISTICS	3 – 73
3.4.1.2.4–1	PFM NTSC VIDEO OPTICAL FIBER CHARACTERISTICS	3 – 74
3.5.1.13–1	MPLM CABIN AIR HEAT ABSORPTION	3 – 79
3.9.3.4–1	SOLAR RADIATION	3 – 90
3.9.4–1	ENVIRONMENTAL CONDITIONS	3 – 91
3.9.4–2	ASSEMBLY COMPLETE QUASI–STEADY STATE MICROGRAVITY ENVIRONMENT	3 – 95
3.12.3.3.1–1	CONTINUOUS NOISE LIMITS	3 – 112
3.12.3.3.2–1	INTERMITTENT NOISE LIMITS	3 – 112
3.12.3.4–1	SURFACE INTERIOR COLORS AND PAINTS	3 – 115
3.12.3.4–2	PAYLOAD REQUIRED ILLUMINATION LEVELS	3 – 115
C.3.5.10.4–1	CHARACTER HEIGHT – 710 MM (28 IN) VIEWING DISTANCE	C – 22
D1	EXHAUST GASES COMPATIBLE WITH THE USL VES WETTED MATERIALS	D – 1
D2	EXHAUST GASES NOT COMPATIBLE WITH THE USL VES WETTED MATERIALS	D – 1
D3	EXHAUST GASES COMPATIBLE WITH THE JEM WASTE GAS SYSTEM WETTED MATERIALS	D – 2

TABLE OF CONTENTS (Continued)

TABLE		PAGE
D4	EXHAUST GASES NOT COMPATIBLE WITH THE JEM WASTE GAS SYSTEM WETTED MATERIALS	D – 2
D5	EXHAUST GASES COMPATIBLE WITH THE APM WASTE GAS SYSTEM WETTED MATERIALS	D – 3
D6	EXHAUST GASES NOT COMPATIBLE WITH THE APM WASTE GAS SYSTEM WETTED MATERIALS	D – 3
E–1	TO BE DETERMINED ITEMS	E – 1
E–2	TO BE RESOLVED ITEMS	E – 2

TABLE OF CONTENTS (Continued)

FIGURES

FIGURE		PAGE
3.1.1.2.1.1–1	LATE ACCESS PAYLOAD ENVELOPE	3 – 3
3.1.1.2.1.1–2	LATE ACCESS HOIST HOOK	3 – 4
3.1.1.2.1.1–3	LATE ACCESS MONORAIL HOIST HOOK	3 – 5
3.1.1.2.1.2–1	EARLY ACCESS PAYLOAD ENVELOPE	3 – 6
3.1.1.2.1.2–2	EARLY ACCESS DEAP MONORAIL INTERFACE	3 – 7
3.1.1.4–1	MANUAL FIRE SUPPRESSION SYSTEM PERFORMANCE CHARACTERISTICS AT THE RACK I/F	3 – 11
3.1.1.7.2–1	SIR AND ISIS DRAWER HANDLES PROTRUSION ENVELOPE	3 – 15
3.1.1.7.2–2	ON–ORBIT SEMI–PERMANENT PROTRUSIONS ENVELOPE	3 – 15
3.1.1.7.3–1	ON–ORBIT TEMPORARY PROTRUSIONS ENVELOPE	3 – 16
3.1.1.7.5–1	ON–ORBIT PROTRUSIONS FOR KEEP ALIVE PAYLOADS ENVELOPE	3 – 17
3.1.1.7.5–2	ISIS FLUID LINE ENVELOPE FOR 3–INCH PROTRUSIONS	3 – 18
3.1.1.7.5–3	ISIS FLUID LINE ENVELOPE FOR 2–INCH PROTRUSIONS	3 – 19
3.2.1–1	ELECTRICAL POWER INTERFACE LOCATIONS	3 – 21
3.2.1.2.2–1	MAXIMUM INTERFACES B AND C RIPPLE VOLTAGE SPECTRUM	3 – 22
3.2.1.3.1–1	INTERFACE B VOLTAGE TRANSIENTS	3 – 23
3.2.1.3.2–1	INTERFACE C VOLTAGE TRANSIENTS	3 – 23
3.2.1.3.3–1	FAULT CLEARING AND PROTECTION TRANSIENT LIMITS	3 – 24
3.2.2.3–1	U.S. RPCM SOFT START/STOP CHARACTERISTICS	3 – 26
3.2.2.4–1	PEAK SURGE CURRENT AMPLITUDE VERSUS STEADY-STATE INPUT CURRENT	3 – 27
3.2.2.4–2	MAXIMUM CURRENT RATE OF CHANGE VERSUS PEAK SURGE CURRENT AMPLITUDE	3 – 28
3.2.2.7.1–1	3KW INTERFACE B LOAD IMPEDANCE LIMITS	3 – 32
3.2.2.7.1–2	6 KW INTERFACE B LOAD IMPEDANCE LIMITS	3 – 33
3.2.2.7.1–3	1.2 TO 1.44 KW AUXILIARY INTERFACE B LOAD IMPEDANCE LIMITS	3 – 34
3.2.2.7.2–1	INTERFACE C LOAD IMPEDANCE LIMITS FOR 10 – 12 AMPERE CIRCUIT RATING	3 – 36
3.2.2.8–1	PULSE APPLIED TO THE POWER INPUT OF THE INTEGRATED RACK OR EPCE	3 – 37
3.2.3.1–1	WIRE DERATING REQUIREMENTS FOR ISPR AND EPCE	3 – 38
3.2.6.2.2–1	MPLM RPC SOFT START/STOP CHARACTERISTICS	3 – 46
3.3.5.2.1.4–1	REMOTE TERMINAL HARDWIRED ADDRESS CODING (EXAMPLE)	3 – 58
3.3.8.1–1	DATA/POWER CABLE DESIGN	3 – 65
3.9.1.3–1	ISS TEMPERATURE/HUMIDITY ENVELOPE	3 – 88
3.9.4–1	OPERATING LIMITS OF THE ISS ATMOSPHERIC TOTAL PRESSURE, AND NITROGEN AND OXYGEN PARTIAL PRESSURES	3 – 92

TABLE OF CONTENTS (Continued)

FIGURE		PAGE
3.9.4–2	ASSEMBLY COMPLETE QUASI-STEADY STATE MICROGRAVITY CONTOURS (SIDE)	3 – 93
3.9.4–3	ASSEMBLY COMPLETE QUASI-STEADY STATE MICROGRAVITY CONTOURS (FRONT)	3 – 93
3.9.4–4	ASSEMBLY COMPLETE VIBRATORY ENVIRONMENT	3 – 94
3.10.3.2–1	MANUAL FIRE SUPPRESSION HARDWARE ENVELOPE	3 – 99
3.10.3.2–2	CLOSED VOLUME PFE NOZZLE	3 – 100
3.12.1–1	ARM, HAND, AND THUMB/FINGER STRENGTH (5TH PERCENTILE MALE DATA)	3 – 103
3.12.1–2	LEG STRENGTH AT VARIOUS KNEE AND THIGH ANGLES (5TH PERCENTILE MALE DATA)	3 – 104
3.12.1–3	TORQUE STRENGTH	3 – 104
3.12.1–4	MAXIMAL STATIC PUSH FORCES	3 – 105
3.12.1–5	MALE GRIP STRENGTH AS A FUNCTION OF THE SEPARATION BETWEEN GRIP ELEMENTS	3 – 106
3.12.2.2–1	MINIMUM SIZES FOR ACCESS OPENINGS FOR FINGERS	3 – 106
3.12.3.3–1	INTERMITTENT NOISE LIMIT REQUIREMENTS	3 – 109
3.12.3.3.2–1	INTERMITTENT NOISE LIMITS	3 – 113
3.12.4.4.2–1	DELETED	3 – 120
3.12.4.4.2–2	MINIMAL CLEARANCE FOR TOOL–OPERATED FASTENERS	3 – 121
3.12.5.1–1	CONTROL SPACING REQUIREMENTS FOR UNGLOVED OPERATION	3 – 124
3.12.5.2.3–1	ROTARY SWITCH GUARD	3 – 125
3.12.5.3–1	VALVE HANDLE - CENTRAL PIVOT TYPE	3 – 127
3.12.5.3–2	VALVE HANDLE – LEVER TYPE	3 – 128
3.12.5.4–1	TOGGLE SWITCHES	3 – 129
3.12.6.4.4–1	MINIMUM IVA HANDLE DIMENSIONS FOR IVA APPLICATIONS	3 – 131
4.3.2.2.8–1	STABILITY TEST SETUP, TRANSIENT RESPONSES	4 – 19
4.3.2.2.8–2	ISS LINE IMPEDANCE SIMULATION NETWORK (LISN)	4 – 20
4.3.12.3.3.1–1	TEST-CORRELATED MODEL PROCESS	4 – 85
C.1–1	LABEL PROCESS	C – 3
C.3.5.3–1	RACK LABEL PLACEMENT	C – 9
C.3.5.3–2	MISCELLANEOUS LABEL PLACEMENT EXAMPLES	C – 10
C.3.5.4.2.1–1	CABLE LABELING EXAMPLE	C – 13
C.3.5.8.–1	GROUPING LABEL EXAMPLES	C – 17

1.0 INTRODUCTION

1.1 PURPOSE

This Interface Requirements Document (IRD) is the principle source interface design requirements document. It will be complied with in order to certify a pressurized payload for integration into applicable ISS modules. These include United States Laboratory (USL), Attached Pressurized Module (APM), Japanese Experiment Module (JEM), Centrifuge Accommodations Module (CAM), and Mini-Pressurized Logistics Module (MPLM). NSTS 1700.7, ISS Addendum and NSTS 18798 provides the safety requirements for payload design.

1.2 SCOPE

The physical, functional, and environmental design requirements associated with payload safety and interface compatibility are included herein. The requirements defined in this document apply to ground handling and processing, transportation and on–orbit phases of the pressurized payload operation. Transportation requirements are specific to the MPLM. The reader is referred to NSTS 21000–IDD–MDK for requirements related to transportation in the Shuttle middeck area. On-orbit requirements apply to all the payloads in the USL, APM, JEM, MPLM, and CAM. The interface requirements defined herein primarily address the module to integrated rack interface. Subrack payloads should design their hardware compatible with the integrated rack or facility they will be transported and operated within.

1.3 USE

This document levies design interface and verification requirements on ISS pressurized payload developers or integrators. These requirements are allocated to a integrated rack or pressurized payload through the applicability matrix in the unique payload Interface Control Document. The unique payload ICD defines and controls the design of the interfaces between the ISS and the pressurized payload, including module unique interfaces, constraints, definition of selectable parameters, and stage unique constraints. This document acts as a guideline to establish commonality with the respect to analytical approaches, models, test methods and tools, technical data and definitions for integrated analysis. Engineering units and conversions will be per ASTM E380–86, Standard For Metric Practice.

1.4 EXCEPTIONS

The Unique Pressurized Payload Hardware ICD documents the payload implementation of the ICD blank book requirements. The Unique ICD is used to determine if the hardware design remains within the interface design parameters defined by this document. Limits of the ICD are established in a conservative manner to minimize individual payload and mixed cargo analyses.

Any exception to requirements, capabilities, or services defined in this IRD shall be documented in a unique section of the derived ICD and evaluated to ensure that the stated condition is controlled. This unique section will document the specific requirement excepted, a description of the existing condition, and a rationale for acceptance. It will also include the necessary PIRN forms and other documentation required by the ISS Program. Exceptions are classified as either exceedances, deviations, or waivers, as defined below.

Definitions:

EXCEPTION

The general term used to identify any payload–proposed departure from specified requirements or interfaces. An exception is further classified as an exceedance, deviation or waiver per the descriptions provided below.

EXCEEDANCE

An Exceedance is a condition that does not comply with a stated IRD requirement or ICD template interface, which is identified prior to baselining the payload–unique ICD. It exceeds the defined payload limits but when combined with the remaining payload complement the module/ISS limits are not exceeded, or it does not impact the performance of the remaining payload complement, and it does not impact vehicle subsystems performance. The exception can be shown to be acceptable within the framework of the standard element level analysis cycle without any unique analysis or controls.

An Exceedance can be approved by the PTR and documented in the payload–unique ICD. Exceedances do not require approval by Control Board.

For Example: One of the requirements is that the delta–T on the Moderate Temperature Loop should be at least 35°F. If “Payload X” wishes to have a delta–T of 32°F, this would be classified as an exceedance. It does not exceed vehicle limits or affect safety; it only influences the efficiency of the use of the Moderate Temperature Loop.

DEVIATION

A Deviation is a non–compliance to an IRD requirement or ICD Template interface, which is identified prior to baselining the payload–unique ICD. It is different from an Exceedance in that the defined exception exceeds module/ISS limits. Additional analysis outside the scope of the standard element analysis cycle or unique operational guidelines or constraints may be needed to approve the exception. Deviations must be approved by a Control Board.

For Example: One of the requirements is that the maximum return temperature of the Moderate Temperature Loop should be 120°F. If “Payload Y” wishes to have a return temperature of 123°F, and their ICD has not been baselined, this would be classified as a Deviation. The vehicle is designed to accommodate return temperatures of 120°F or less, and special analysis must be done to determine if the vehicle can accommodate this, or if operational constraints will be required.

WAIVER

A Waiver is a condition found in non–compliance to an IRD requirement or to the baselined payload–unique ICD, which is identified after baselining the payload–unique ICD. Typically this will occur as a result of the final as–built hardware verification program. It may require additional analysis outside of the scope of the standard element analysis cycle or unique operational guidelines or constraints to approve the exception. Waivers must be approved by a Control Board.

For Example: One of the requirements is that the continuous acoustic noise must not exceed NC40. “Payload Z” has already baselined their ICD, and recent testing of the flight hardware shows that their continuous noise level is NC45. Additional evaluation will be required to determine if this can be accepted, and it may result in operational constraints.

Note:

Exceedances, deviations, and waiver to the requirements in this document require the use of the formal Exception Process as detailed in Section 5 of SSP 57001.

(This Page Intentionally Left Blank)

2.0 DOCUMENTATION

The following documents include specifications, models, standards, guidelines, handbooks, and other special publications. The status of ISSP documents may be determined from the International Space Station Program Baseline Activity Index and Status Report.

The documents in this paragraph form a part of this specification to the extent specified herein. In the event of a conflict between the documents referenced herein and the contents of this specification, the contents of this specification shall be considered a superseding requirement.

2.1 APPLICABLE DOCUMENTS

DOCUMENT NO.	TITLE
ANSI S12.23	Method for the Designation of Sound Power Emitted by Machinery and Equipment.
ANSI S12.23 1996	Method for the Designation of Sound Power Emitted by Machinery and Equipment.
ANSI S12.31	Precision Methods for Determination of Sound Power Levels of Broad-Band Noise Sources in Reverberation Rooms.
ANSI S12.32	Precision Methods for the Determination of Sound Power Levels of Discrete–Frequency and Narrow-Band Noise Sources in Reverberation Rooms.
ANSI S12.33	Engineering Methods for the Determination of Sound Power Levels of Noise Sources in a Special Reverberation Test Room
ANSI S12.34	Engineering Methods for the Determination Sound Power Levels of Noise Sources for Essentially Free-Field Conditions Over a Reflecting Plane.
ANSI-S12.35	Precision Methods for the Determination of Sound Power Levels of Noise Sources in Anechoic and Hemi–Anechoic Rooms.
ANSI-S12.36	Survey Methods for the Determination of Sound Power Levels of Noise Sources.
ANSI X3.255	Fibre Distributed Data Interface (FDDI) – Abstract Test Suite for FDDI Physical Medium Dependent Conformance Testing (PMD ATS).
ASTM E380–86	Standard Practice for Use of the International System of Units (SI) (Modernized Metric System)
CCSDS 301.0–B–2	CCSDS Time Code Format
CCSDS 701.0-B-2	Advanced Orbiting Systems, Network and Data Links: Architectural Specification, Blue Book

DOCUMENT NO.	TITLE
220G07455	Rack Handling Adapters – Upper Structure
220G07470	Rack Handling Adapters – MSFC Lower Structure
220G07475	Rack Handling Adapters – KSC Lower Structure
220G07500	Rack Shipping Containers
683-50243-4	ED for Refrigerator/Freezer Rack Structure
683–10007	Fire Detection Assembly
683–17103	Fluid System Servicer (FSS) Interface Definition Drawings
D684–10056–01	International Space Station Program, Prime Contractor Software Standards and Procedures Specification
EIA–RS–170	Electrical Performance Standards for Television Studio Facilities
EIA/TIA 250	Electrical Performance for Television Relay Facility
FED–STD–595	Federal Standard Colors Used in Government Procurement
ISO/IEC 8802-3	Carrier Sense Multiple Access With Collision Detection (CSMA/CD) Access Method and Physical Layer Specifications
JSC 27199	End Item Specification for the International Space Station Portable Utility Light
JSC 27260	Decal Process Document and Catalog
MIL–HDBK–1553	Digital Time Division Command/Response Multiplex Data Bus Handbook
MIL–STD–1189	Standard Department of Defense Bar Code Symbology
MIL–STD–1522	Standard General Requirements for Safe Design and Operation of Pressurized Missile and Space Systems
MIL–STD–1553	Digital Time Division Command/Response Multiplex Data Bus
MIL-STD-1686	Electrostatic Discharge Control Program for Protection of Electrical and Electronic Parts, Assemblies and Equipment (Excluding Electrically Initiated Explosive Devices) Document
MIL-STD-1777	Internet Protocol
MSFC–SPEC–250	Protective Finishes for Space Vehicle Structures and Associated Flight Equipment, General Specification for Document
MSFC–STD–275	Marking of Electrical Ground Support Equipment, Front Panels, and Rack Title Plates
MSFC–STD–531	High Voltage Design Criteria

DOCUMENT NO.	TITLE
NHB 8060.1	Flammability, Odor, Offgassing, and Compatibility Requirements and Test Procedures For Materials in Environments That Support Combustion
NTC Report No. 7	Video Facility Testing Technical Performance Objectives (NTC)
NSTS–13830	Implementation Procedure for NSTS Payloads System Safety Requirements
NSTS 1700.7 ISS Addendum	Safety Policy and Requirements for Payloads using the International Space Station
NSTS 18798	Interpretations of NSTS Payload Safety Requirements
NSTS 21000–IDD–MDK	Middeck Payloads Interface Definition Document for Middeck Accommodations
SAIC–TN–9550	Ionizing Radiation Dose Estimates for International Space Station Alpha using the CADrays 3-D Mass Model
SN–C–0005	NSTS Contamination Control Requirements Manual
SSP 30233	Space Station Requirements for Material and Processes
SSP 30237	Space Station Requirements for Electromagnetic Emission and Susceptibility Requirements
SSP 30238	Space Station Electromagnetic Techniques
SSP 30240	Space Station Grounding Requirements
SSP 30242	Space Station Cable/Wire Design and Control Requirements for Electromagnetic Compatibility
SSP 30243	Space Station Requirements for Electromagnetic Compatibility
SSP 30257:004	Space Station Program Intravehicular Activity Restraints and Mobility Aids Standard ICD
SSP 30262:013	Smoke Detector Assembly Standard ICD
SSP 30312	Electrical, Electronic, and Electromechanical (EEE) and Mechanical Parts Management and Implementation Plan For Space Station Program
SSP 30425	Space Station Program Natural Environment Definition for Design
SSP 30426	External Contamination Control Requirements
SSP 30482 (V1)	Electric Power Specifications and Standards, Vol. 1: EPS Performance Specifications
SSP 30482 (V2)	Electric Power Specifications and Standards, Vol. 2: Consumer Constraints
SSP 30512	Ionizing Radiation Design Environment

DOCUMENT NO.	TITLE
SSP 30575	Interior and Exterior Operational Location Coding System
SSP 41000	System Specification for the International Space Station
SSP 41002	International Standard Payload Rack to NASA/NASDA Modules Interface Control Document
SSP 41017	Rack to Mini Pressurized Logistics Module Interface Control Document (ICD) Part 1 and Part 2
SSP 41155	Refrigerator/Freezer Rack to MPLM ICD
SSP 41172	Qualification and Acceptance Environmental Test Requirements
SSP 41175-02	Software ICD Part 1 Station Management and Control to ISS Book 2 General Interface Software Interfaces Requirement
SSP 41175–08	Software ICD Part 1 SMC to ISS Book 8 Payload Multiplexer/ Demultiplexer Interface
SSP 50005	International Space Station Flight Crew Integration Standard (NASA- STD-3000/T) Document
SSP 50007	Space Station Inventory Management System Label Specification
SSP 50008	International Space Station Interior Color Scheme
SSP 50014	International Space Station Utility Coding Specification
SSP 50184	High Rate Data Link Physical Media, Physical Signaling & Protocol Specifications
SSP 50200–8	Station Program Implementation Plan Vol. VIII, Increment Execution Preparation
SSP 50313	Display and Graphical Commonality Standard
SSP 50467	ISS Stowage Accommodations Handbook: Pressurized Volume
SSP 52005	ISS Payload Flight Equipment and Guidelines For Safety Critical Structures
SSP 52050	Software Interface Control Document Part 1, International Standard Payload Rack to International Space Station.
SSP 52051	Payload Interface Definition Document (IDD) Baseline – SSP 52051 – User Electric Power Specifications and Standards.
SSP 57001	Pressurized Payload Hardware ICD
SSP 57002	Pressurized Payload Software ICD
SSP 57005	Active Rack Isolation System to Payload ICD

DOCUMENT NO.	TITLE
SSQ 21635	Connectors and Accessories, Electrical, Rectangular, Rack and Panel
SSQ 21654	Cable, Single Fiber, Multitude, Space Quality, General Specification for Document
SSQ 21655	Cable, Electrical, MIL-STD-1553 DataBus, Space Quality, General Specification for Document

2.2 REFERENCE DOCUMENTS

ICD–A–21378	SSP DEAP TO ISSP HAS/CHEK GSE Interfaces
ICD–A–21379	ISS Payload/GSE Ground Operations Envelope ICD
SSP 50053	ASI Flight Hardware to Launch and Landing Site ICD

(This Page Intentionally Left Blank)

3.0 PAYLOAD INTERFACE REQUIREMENTS AND GUIDANCE

The requirements contained in this section will be complied with in order to certify a payload for integration into the applicable ISS modules. This section is divided by the following disciplines: Structural and Mechanical, Electrical, Command and Data Handling, Audio/Video, Thermal Control, Vacuum Exhaust and Vacuum Resource, Gases, Payload Support Services, Environment, Fire Protection, Material and Parts, Human Factors. Unless otherwise specified as USL, JEM, APM, MPLM, or CAM, a requirement applies to all modules.

3.1 STRUCTURAL/MECHANICAL, AND MICROGRAVITY AND STOWAGE INTERFACE REQUIREMENTS

3.1.1 STRUCTURAL/MECHANICAL

3.1.1.1 GSE INTERFACES

A. Integrated racks shall interface to the KSC GSE Rack Insertion Device in accordance with SSP 41017 Part 1, paragraph 3.2.1.1.2 Static Envelope, 3.2.1.4.3 Interface Loads, and SSP 41017 Part 2, paragraph 3.3.2 Upper Attachment Interfaces and 3.3.3 Ground Handling Attachment Interfaces.

B. Integrated racks shall interface to Rack Shipping Containers in accordance with the Teledyne Brown Engineering (TBE) as-built drawing 220G07500.

C. Integrated racks shall interface to Rack Handling Adapters (RHA) in accordance with the following TBE as-built drawings: 220G07455 Upper Structure, 220G07470 MSFC Lower Structure, and 220G07475 KSC Lower Structure.

D. Integrated racks shall be limited to ground transportation accelerations of 80% of flight accelerations defined by SSP 41017 Part 1, paragraph 3.2.1.4.2.

3.1.1.2 MPLM INTERFACES

A. Integrated racks shall interface to the MPLM structural attach points in accordance with SSP 41017 Part 2, paragraph 3.1.1.

B. Integrated racks shall maintain positive margins of safety for MPLM depress rates of 890 Pa/second (7.75 psi/minute) and repress rates of 800 Pa/second (6.96 psi/minute).

C. Deleted.

D. Deleted.

E. Integrated racks shall be limited to producing interface attach point loads less than or equal to those identified by SSP 41017 Part 1, paragraph 3.2.1.4.3, based upon an acceleration environment as defined in SSP 41017 Part 1, paragraph 3.2.1.4.2.

3.1.1.2.1 MPLM LATE/EARLY ACCESS REQUIREMENTS

The requirements contained in this section define and control the ISS MPLM late/early access for payloads and associated GSE. Additional program provided late/early access GSE data is referenced in SSP 50053, ASI Flight Hardware to Launch and Landing Site ICD; ICD–A–21378, SSP DEAP to ISSP HAS / CHEK GSE Interfaces; ICD–A–21379, ISS Payload / GSE Ground Operations Envelope.

Late Access is defined as cargo integration during pre–launch activities with the orbiter in the vertical position. Late Access for stowage of conditioned samples inside the MPLM is completed by L–88 hours, and is followed by MPLM late access GSE removal.

Early Access is defined as cargo deintegration during post–landing activities with the orbiter in the horizontal position. Payload activities will begin approximately 96 hours after landing / return (R+96).

MPLM late/early access payloads, equipment items, samples and associated GSE weight shall not exceed 250 lbs per individual transfer.

3.1.1.2.1.1 MPLM LATE ACCESS ENVELOPE (KSC)

A. Payloads, equipment items, samples and associated GSE requiring MPLM late access shall comply with the hatch envelope defined in Figure 3.1.1.2.1.1–1.

B. Payloads, equipment items, samples and associated GSE requiring MPLM late access shall comply with the late access hoist hook interface defined in Figure 3.1.1.2.1.1–2.

C. Payloads, equipment items, samples and associated GSE requiring MPLM late access shall comply with the late access monorail hook hoist interface defined in Figure 3.1.1.2.1.1–3.

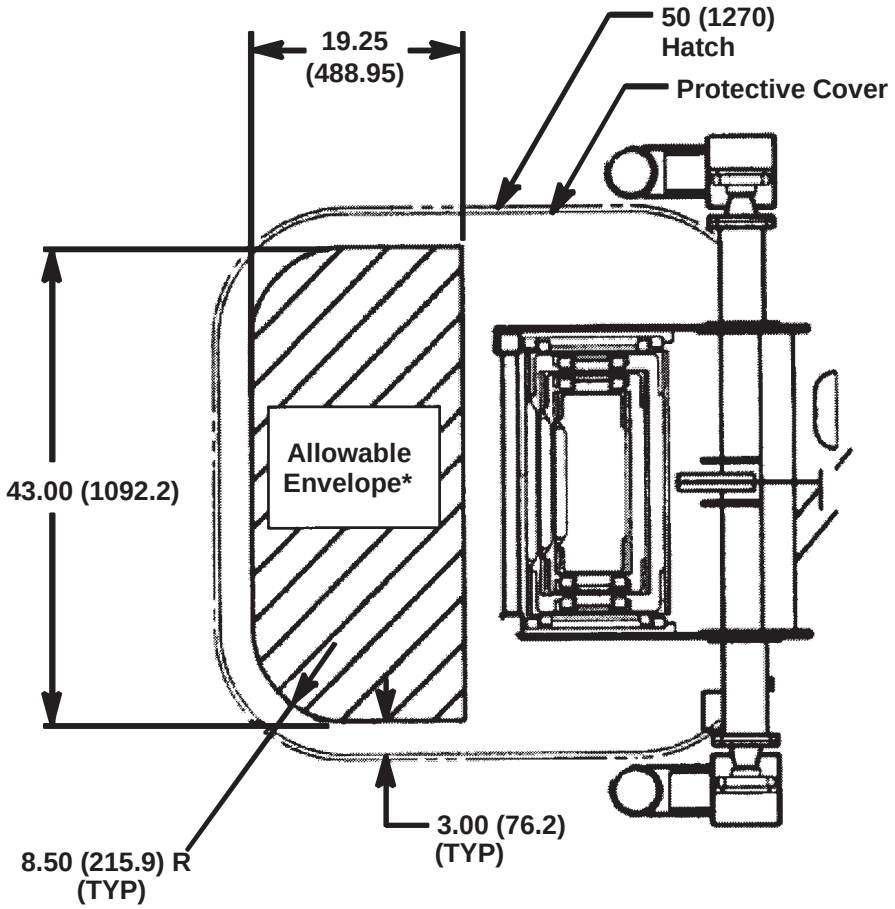

***The allowable height of this envelope is 40 inches.**

Inches (millimeters)

FIGURE 3.1.1.2.1.1–1 LATE ACCESS PAYLOAD ENVELOPE

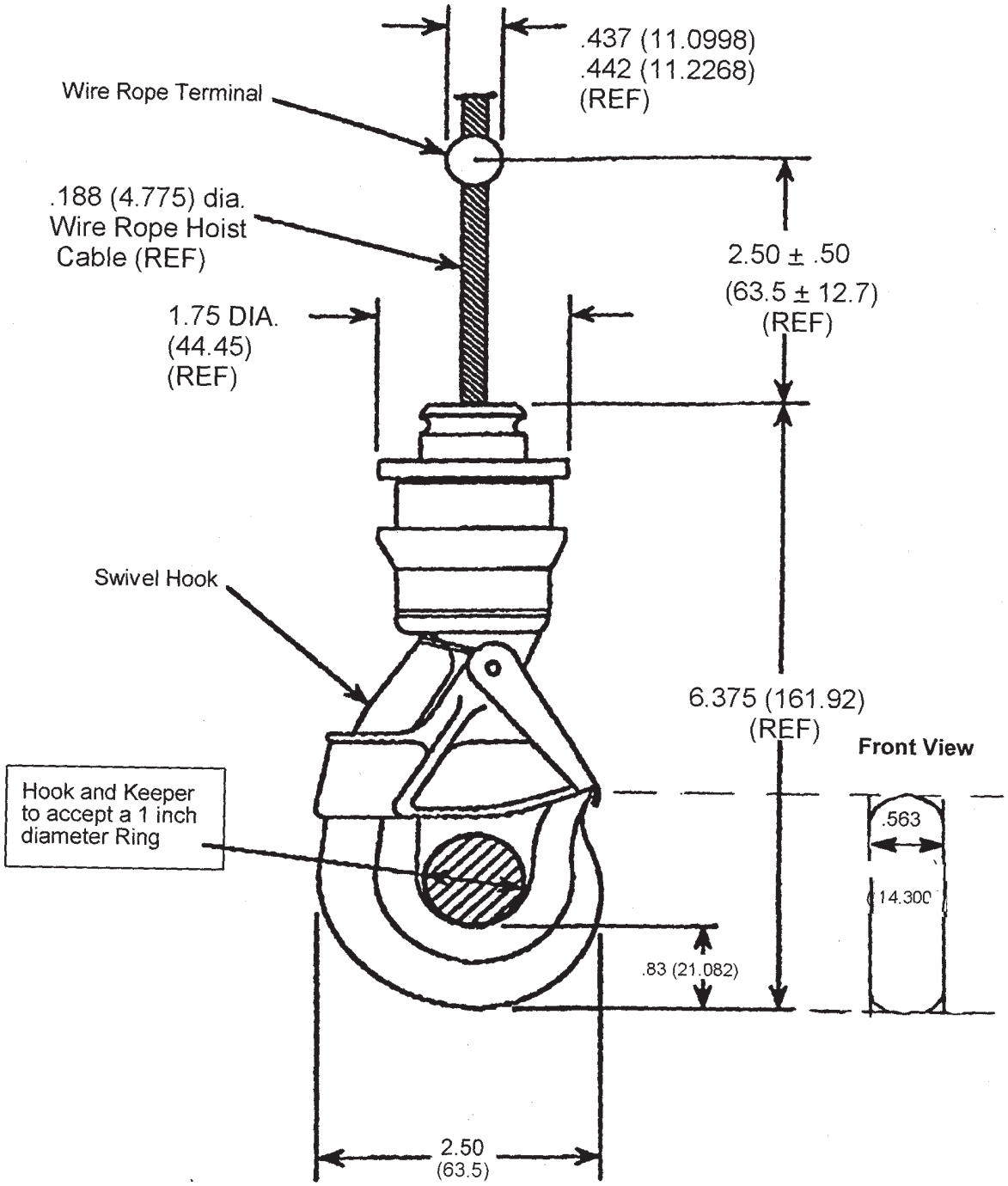

Inches (millimeters)

FIGURE 3.1.1.2.1.1–2 LATE ACCESS HOIST HOOK

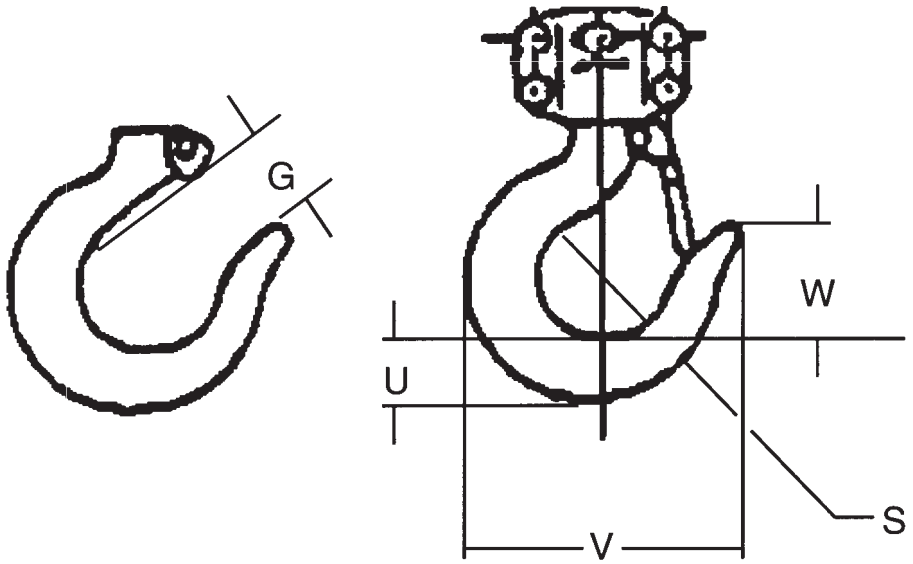

Dimensions (inches and mm)				
G	S	U	V	W
1.062 (26.975)	1.687 (42.85)	1.062 (26.975)	3 (76.2)	1.375 (34.925)

Note: Hook and kepper to accept a 1 inch diameter ring.

FIGURE 3.1.1.2.1.1–3 LATE ACCESS MONORAIL HOIST HOOK

3.1.1.2.1.2 MPLM EARLY ACCESS ENVELOPES (KSC AND DFRC)

A. Payloads, equipment items, samples and associated GSE requiring MPLM early access shall comply with the orbiter docking system (ODS) envelope defined in Figure 3.1.1.2.1.2–1.

B. Payloads, equipment items, samples and associated GSE requiring MPLM early access shall comply with the Dryden Early Access Platform (DEAP) monorail interface defined in Figure 3.1.1.2.1.2–2.

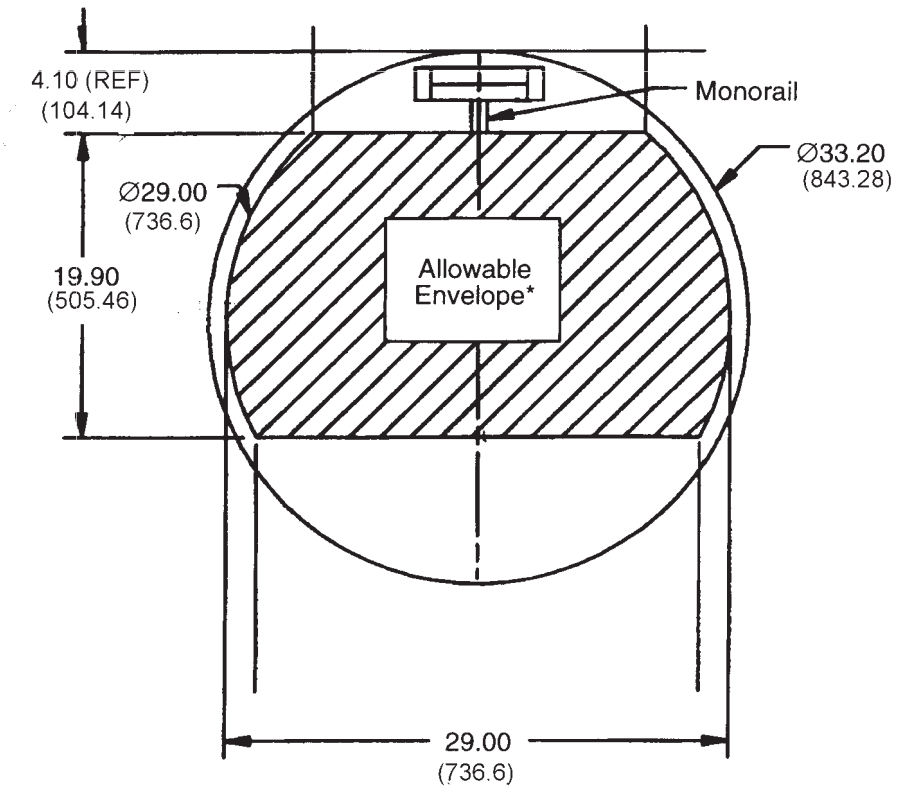

*The allowable length of this envelope is 43 inches.

Inches (millimeters)

FIGURE 3.1.1.2.1.2–1 EARLY ACCESS PAYLOAD ENVELOPE

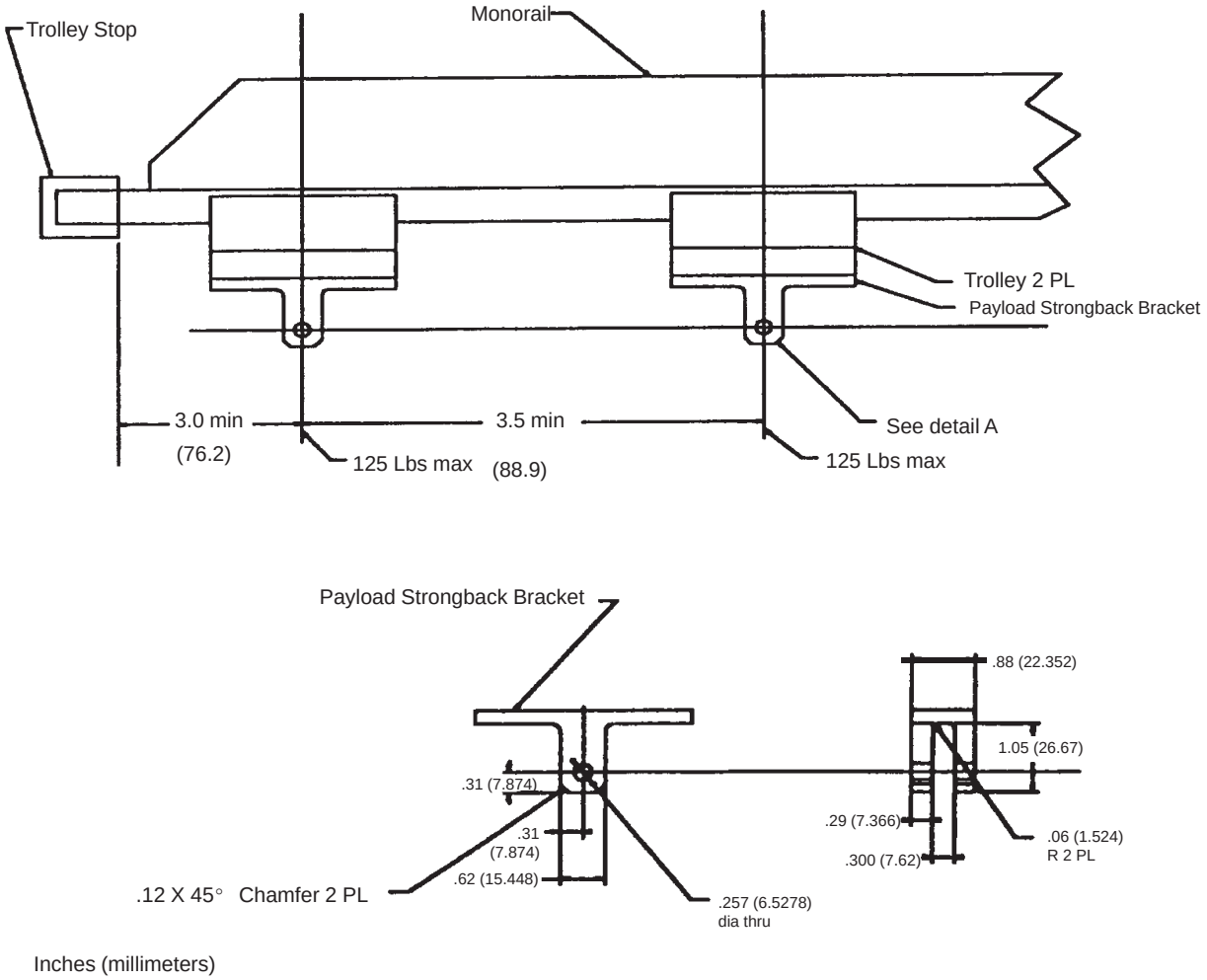

FIGURE 3.1.1.2.1.2–2 EARLY ACCESS DEAP MONORAIL INTERFACE

3.1.1.3 LOADS REQUIREMENTS

A. Integrated racks shall provide positive margins of safety for launch and landing loading conditions in the MPLM based upon an acceleration environment as defined in SSP 41017 Part 1, paragraph 3.2.1.4.2. Loads should be applied consistent with the rack coordinate system defined in SSP 41017, Part 2, paragraph 3.1.3.

B. Integrated racks shall provide positive margins of safety for on-orbit loads of 0.2 Gs acting in any direction.

C. Rack Utility Panel (RUP) umbilicals shall be restrained during launch and landing to prevent damage to loose connectors from loads and vibration.

D. Integrated rack equipment shall provide positive margins of safety when exposed to the crew induced loads defined in Table 3.1.1.3–1, Crew-Induced Loads.

E. For design and qualification purposes, components mounted to ISPR posts shall maintain positive margins of safety for the MPLM ascent random vibration environment as defined in Table 3.1.1.3–2, “Random Vibration Criteria for ISPR Post-Mounted Equipment Weighing 100 Pounds or Less in the MPLM”, or Table 3.1.1.3–3, ”Random Vibration Criteria for ISPR Post–Mounted Equipment Weighing More Than 100 Pounds in the MPLM.”

TABLE 3.1.1.3–1 CREW-INDUCED LOADS

CREW SYSTEM OR STRUCTURE	TYPE OF LOAD	LOAD	DIRECTION OF LOAD
Levers, Handles, Operating Wheels, Controls	Push or Pull concentrated on most extreme edge	222.6 N (50 lbf), limit	Any direction
Small Knobs	Twist (torsion)	14.9 N–m (11 ft-lbf), limit	Either direction
Exposed Utility Lines (Gas, Fluid, and Vacuum)	Push or Pull	222.6 N (50 lbf)	Any direction
Rack front panels and any other normally exposed equipment	Load distributed over a 4 inch by 4 inch area	556.4 N (125 lbf), limit	Any direction
Legend: ft = feet, m = meter, N = Newton, lbf = pounds force			

TABLE 3.1.1.3–2 RANDOM VIBRATION CRITERIA FOR ISPR POST-MOUNTED EQUIPMENT WEIGHING 100 POUNDS OR LESS IN THE MPLM

FREQUENCY	LEVEL
20 Hz	0.005 g^2/Hz
20–70 Hz	+ 5.0 dB/oct
70–200 Hz	0.04 g^2/Hz
200–2000 Hz	–3.9 dB/oct
2000 Hz	0.002 g^2/Hz
Composite	4.4 grms
Note: Criteria is the same for all directions (X,Y,Z)	

TABLE 3.1.1.3–3 RANDOM VIBRATION CRITERIA FOR ISPR POST-MOUNTED EQUIPMENT WEIGHING MORE THAN 100 POUNDS IN THE MPLM

FREQUENCY	LEVEL
20 Hz	0.002 g2/Hz
20–70 Hz	+ 4.8 dB/oct
70–200 Hz	0.015 g2/Hz
200–2000 Hz	–3.7 dB/oct
2000 Hz	0.0006 g2/Hz
Composite	2.4 grms
Note: Criteria is the same for all directions (X,Y,Z)	

F. Components mounted to the ISPRs shall maintain positive margins of safety for the launch and landing conditions in the MPLM. For early design, the acceleration environment defined in Table 3.1.1.3–4, "Payload Mounted Equipment Load Factors (Equipment Frequency 35 Hz)" will be used. These load factors will be superseded by load factors obtained through ISS-performed Coupled Loads Analysis as described in SSP 52005.

TABLE 3.1.1.3–4 PAYLOAD ISPR MOUNTED EQUIPMENT LOAD FACTORS (EQUIPMENT FREQUENCY 35 HZ)

Liftoff	X	Y	Z
(g)	± 7.7	± 11.6	± 9.9
Landing	**X**	**Y**	**Z**
(g)	± 5.4	± 7.7	± 8.8
Note: Load factors apply concurrently in all possible combinations for each event and are shown in the rack coordinate system defined in SSP 41017, Part 2, paragraph 3.1.3.			

3.1.1.4 RACK REQUIREMENTS

A. Integrated racks shall be limited to 804.2 kg (1773 lbs) for launch and landing in the MPLM and for ground and on-orbit operations.

B. Integrated racks shall maintain positive margins of safety for the on–orbit depress/repress rates identified in SSP 41002 paragraph 3.1.7.2.1.

C. The integrated rack and kneebrace shall have a modal frequency in accordance with SSP 52005 paragraph 5.7, second paragraph for launch and landing, based on rigidly mounting the integrated rack in the launch configuration.

D. Equipment mounted directly to the rack will have a modal frequency goal of 35 Hz for launch and landing, based on rigidly mounting the component at the component to rack interface.

E. Integrated racks shall comply with the keepout zone for rack pivot mechanism as defined in SSP 41017 Part 1, paragraph 3.2.1.1.2.

F. Integrated racks that will be installed in the U.S. Lab Nadir Window location shall accommodate the modified ISPR static envelope defined by Figure 3.1.1.4–1 of the Pressurized Payload Hardware ICD, SSP 57001.

G. Deleted

H. Deleted.

I. Integrated racks shall be capable of rotating a minimum of 80 degrees about the pivot point for on-orbit installation, removal, and maintenance functions.

J. Deleted

K. Integrated racks and rack equipment that have PFE access ports shall maintain positive margins of safety when exposed to the PFE discharge rate given in Figure 3.1.1.4–1.

L. Integrated racks requiring rotation shall use the rack and crew restraints identified in SSP 30257:004 (for example, the 14 inch fixed length tether and the 71 inch adjustable length tether) to secure the rack in these rotated positions for payload operations and maintenance.

M. Integrated racks shall not have a pressure relief device on the front of the rack.

3.1.1.4.1 LAB WINDOW RACK LOCATION REQUIREMENTS

When the lab window scratch pane is removed, radiation shielding as specified in 3.9.3.4 is required.

A. When the lab window scratch pane is removed, a protective cover shall be provided that prevents contact with the lab window surface.

B. Integrated racks at the lab window location shall accommodate a keep–out zone as specified in SSP 57001, Figure 3.1.1.4–1.

C. Integrated racks at the lab window location, that are open on the back (window) side of the rack, shall provide a barrier from the Lab pressure wall to the integrated rack to isolate the rack volume from the stand–offs and area behind the racks.

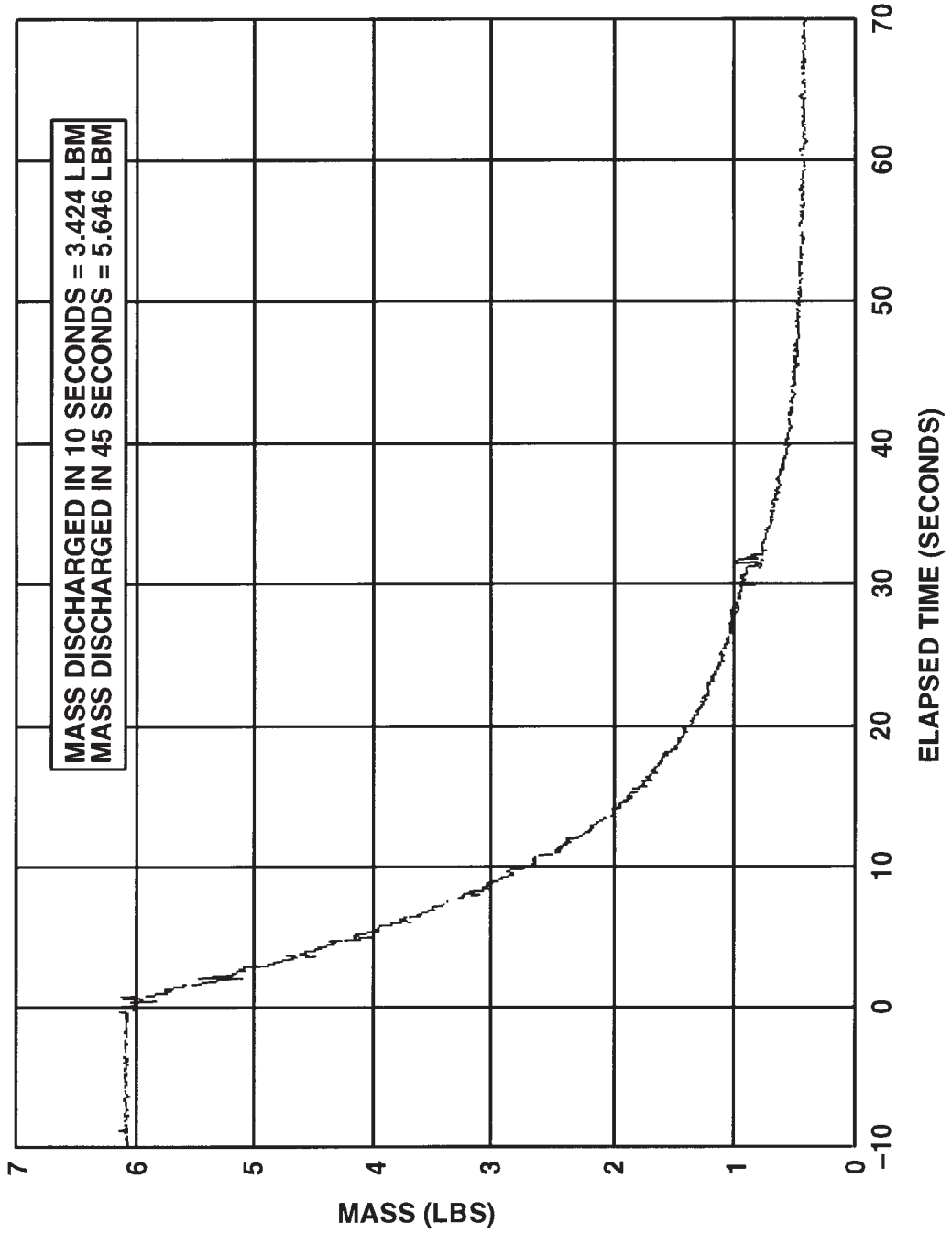

FIGURE 3.1.1.4–1 MANUAL FIRE SUPPRESSION SYSTEM PERFORMANCE CHARACTERISTICS AT THE RACK I/F

3.1.1.5 SAFETY CRITICAL STRUCTURES REQUIREMENTS

A. Integrated racks shall be designed in accordance with the requirements specified in SSP 52005.

B. Deleted

C. Deleted

D. Deleted

3.1.1.6 CONNECTOR AND UMBILICAL PHYSICAL MATE

3.1.1.6.1 CONNECTOR PHYSICAL MATE

Integrated rack and sub-rack equipment shall physically mate with the UIP, UOP and Fluid Services connectors intended to be used by the payload as listed in Table 3.1.1.6.1–1.

TABLE 3.1.1.6.1–1 MODULE CONNECTORS

	Module Connector	Module Part Number	Resource
UIP			
A	J1	NATC07T25LN3SN	Main Power
B	J2	NATC07T25LN3SA	Essential/Auxiliary Power
C	J3	NATC07T15N35SN	1553 Bus A
D	J4	NATC07T15N35SA	1553 Bus B
E	J7	NATC07T13N4SN	HRDL
F	J16	NATC07T15N97SB	Optical Video
G	J43	NATC07T13N35SA	FDS/Power Maintenance
H	J45	NATC07T11N35SC	EWACS
I	J46	NATC07T11N35SA	LAN–1
J	J47	NATC07T11N35SB	LAN–2
K	J77	NATC07T13N35SB	Electrical Video
L	TCS Mod Supply	683–16348, male, Category 6, Keying B	TCS Mod Supply
M	TCS Mod Return	683–16348, male, Category 6, Keying C	TCS Mod Return
N	TCS Low Supply	683–16348, male, Category 6, Keying B	TCS Low Supply
O	TCS Low Return	683–16348, male, Category 6, Keying C	TCS Low Return
P	GN2	683–16348, male, Category 8, Keying B	GN2
Q	Vacuum Exhaust	683–16348, male, Category 3, Keying B	Vacuum Exhaust
R	Vacuum Resource	683–16348, male, Category 3, Keying A	Vacuum Resource
S	Ar	683–16348, male, Category 8, Keying C	AR
T	He	683–16348, male, Category 8, Keying E	HE
U	CO2	683–16348, male, Category 8, Keying D	CO2
FLUID SERVICES			
V	Potable Water	683–16348, male, Category 7, Keying D	Potable Water
W	Fluid System Servicer	683–16348, male, Category 6, Universal (no–keying)	Fluid System Servicer
UOP			
X	J3	NATC00T15N97SN	Power/1553 Bus
Y	J4	NATC00T15N97SN	Power/1553 Bus
Z	J4	NATC00T15N97SA	Power/Ethernet
Notes: 1. Integrated rack connector part numbers are listed in the appropriate sections of SSP 57001. 2. UOP connector architecture is specified in SSP 57001, paragraph 3.2.1.2.			
AA	J1	NATC00T15N97SN	Power/Data
AB	J2	NATC00T15N97SN	Power/Data
AC	J3	NATC00T15N97SN	Power
AD	J4 (SUP – 1 & 4 only)	NATC00T15N35SN	APM Payload 1553 Bus
AE	J5	NATC00T11N35SN	APM IEEE 802.3 Nominal LAN
AF	J6 (SUP – 1 & 4 only)	NATC00T15N97SN	Video/High Rate Data
AG	J7 (SUP – 1 & 4 only)	NATC00T13N35SN	Smoke Sensor/EWACS
AH	J8	Reserved	Reserved
AI	J9	NATC00T11N35SN	APM IEEE 802.3 Redundant LAN

3.1.1.6.2 UMBILICAL PHYSICAL MATE

Integrated racks shall provide a Rack Utility Panel and umbilicals that allow connection of rack utilities from the rack to the standoff Utility Interface Panel defined in SSP 41002, Figure 3.2.2-1 and the appropriate Utility Interface Panel connector layout defined in SSP 41002 Figures 3.3-1 through 3.3-5.

3.1.1.7 ON–ORBIT PAYLOAD PROTRUSIONS

Definitions for on–orbit permanent protrusions, on–orbit semi–permanent protrusions, on–orbit temporary protrusions, on–orbit momentary protrusions, and protrusions for on–orbit keep alive payloads can be found in Appendix B, Glossary of Terms. The requirements in Section 3.1.1.7 apply to installation and operation activities, but not to maintenance activities.

Note: The on–orbit protrusion requirements in this section are applicable to when the payload is on–orbit and do not apply to other phases of the transportation of the payload (e.g., launch, landing, MPLM installation).

A. On–orbit protrusions, excluding momentary protrusions, shall not extend laterally across the edges of the rack or pass between racks.

B. The integrated rack hardware, excluding momentary protrusions, shall not prevent attachment of RMA on any seat track attach holes.

Constraints which may be associated with payload protrusions include:

- removal of the protrusion during rack installation, translation, and crew translation
- removal of the protrusion if RMA is installed on the rack
- removal of the protrusion to prevent interference with microgravity operations
- removal or powering off of the rack if the protrusion blocks PFE access or the fire indicator
- may limit the rack location (e.g., Protrusion located in the floor and the ceiling are limited to a total of no more than 12 inches.)
- may limit operation of the payload

As is indicated by the constraints above, protrusions have a negative impact on crew operations and are to be minimized.

3.1.1.7.1 ON–ORBIT PERMANENT PROTRUSIONS

The integrated rack shall not allow permanent protrusions.

3.1.1.7.2 ON–ORBIT SEMI–PERMANENT PROTRUSIONS

A. SIR and ISIS drawer handles shall remain within the envelope shown in Figure 3.1.1.7.2–1.

B. Other on–orbit semi–permanent protrusions shall be limited to no more than 500 square inches within the envelope shown in Figure 3.1.1.7.2–2.

Note: The sum of the on–orbit semi–permanent protrusions and the on–orbit protrusion for keep alive payloads is limited to no more than 500 square inches.

Note: The SIR and ISIS drawer handles are not included in the 500 square inch limit.

C. All on–orbit semi–permanent protrusions shall be designed to be removable by the crew with hand operations and/or standard IVA tools.

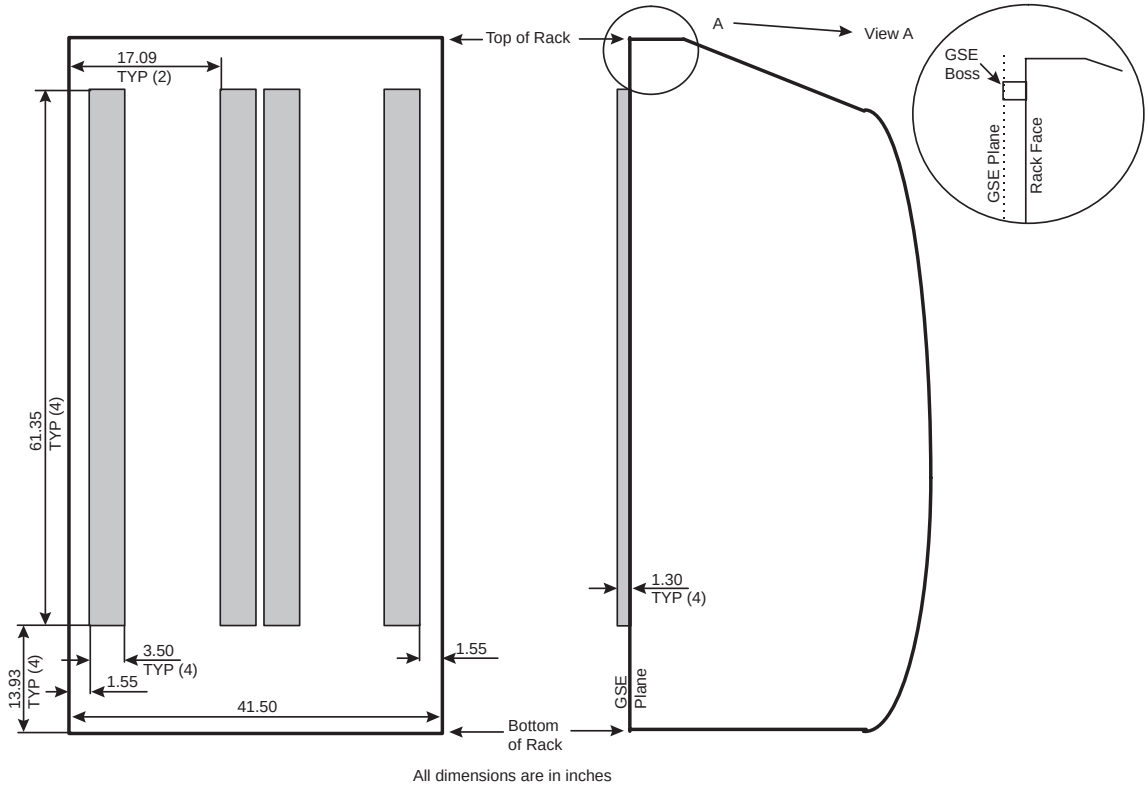

FIGURE 3.1.1.7.2–1 SIR AND ISIS DRAWER HANDLES PROTRUSION ENVELOPE

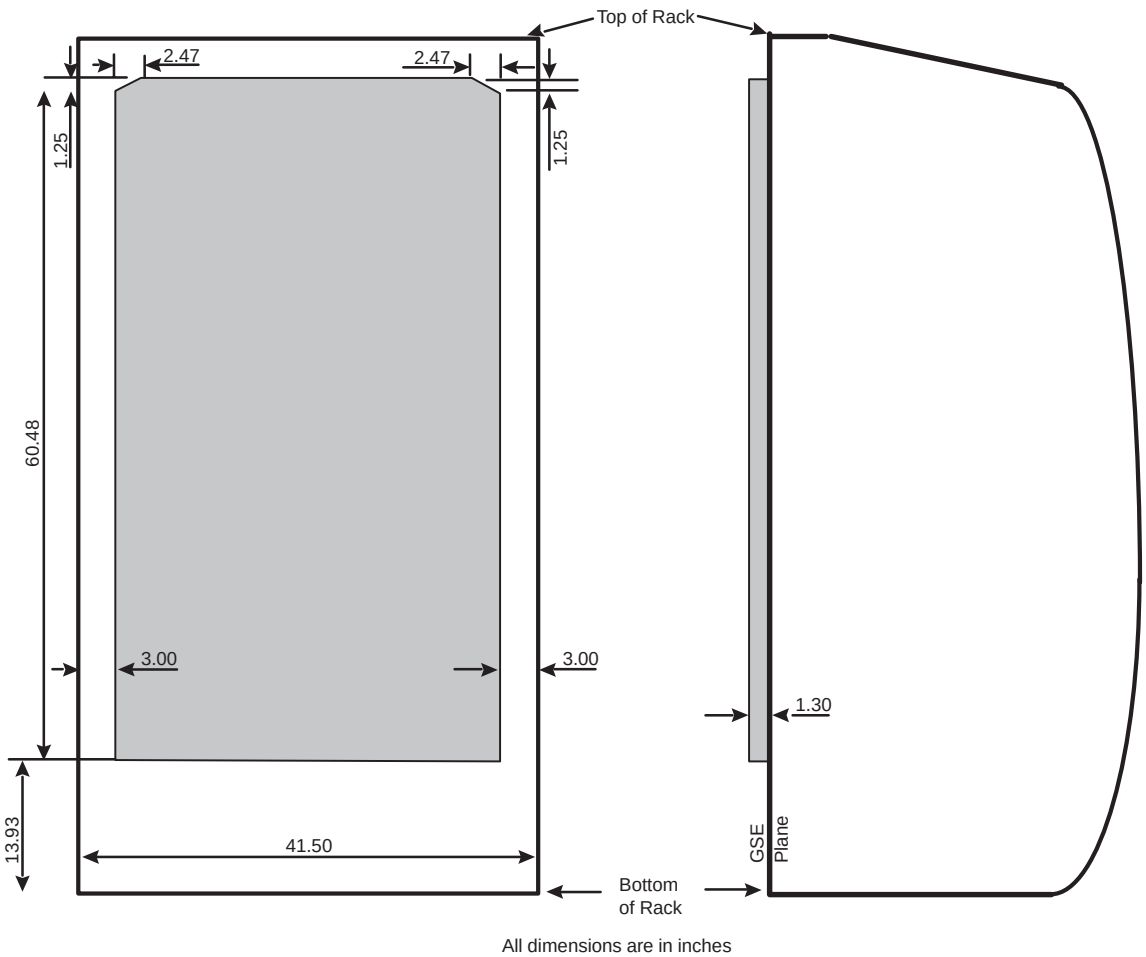

Note: Protrusions are limited to 1.3 inches for ground processing and launch/landing as described in paragraph 3.1.1.1.A

FIGURE 3.1.1.7.2–2 ON–ORBIT SEMI–PERMANENT PROTRUSIONS ENVELOPE

3.1.1.7.3 ON–ORBIT TEMPORARY PROTRUSIONS

A. On–orbit temporary protrusions shall remain within the envelope shown in Figure 3.1.1.7.3–1.

B. The combination of all on–orbit temporary protrusions for the integrated rack shall be designed such that they can be eliminated or returned to their stowed configuration by the crew with hand operations and/or standard IVA tools within 10 minutes.

Note: Integrated racks must provide stowage for on–orbit temporary protrusions within their stowage allocation.

Note: On–orbit temporary protrusions for payloads located in the floor or ceiling are limited to 6 inches each or a total of 12 inches for both floor and ceiling.

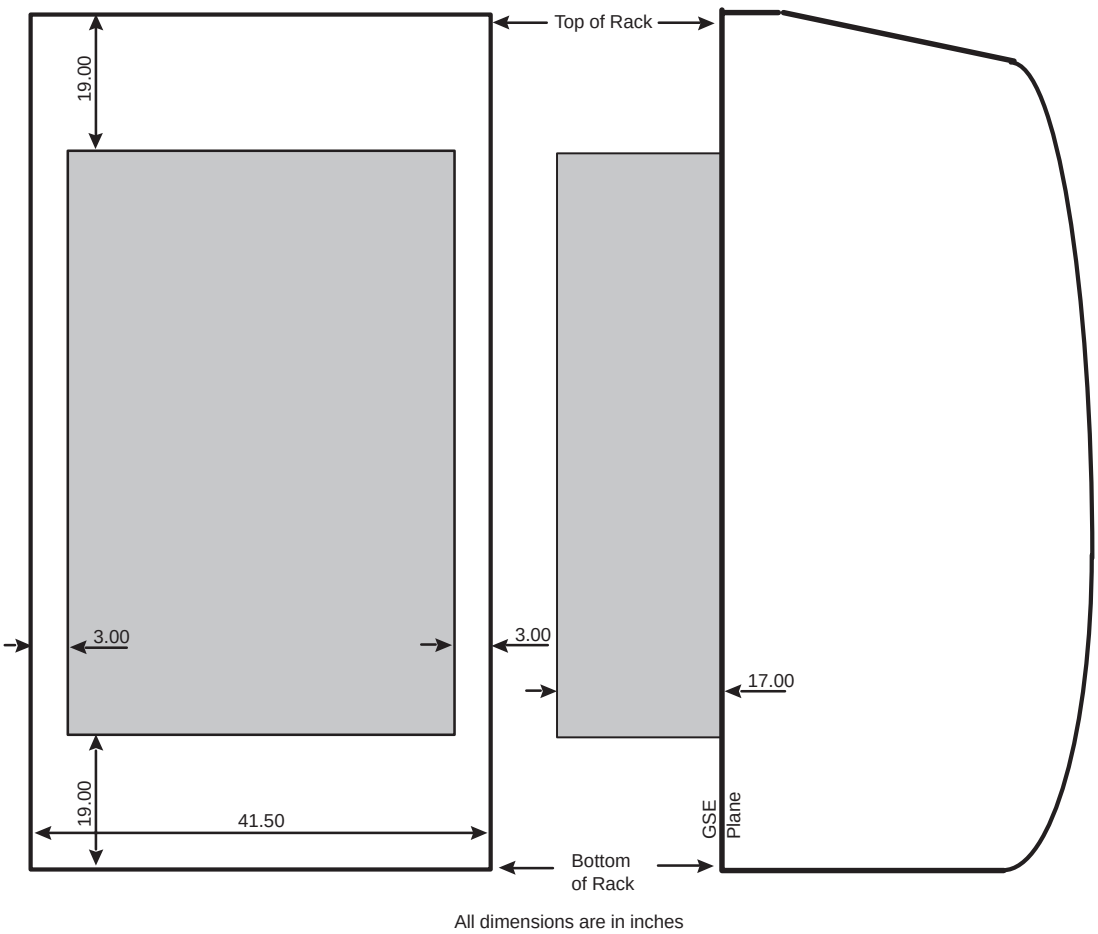

Note: Protrusions are limited to 1.3 inches for ground processing and launch/landing as described in paragraph 3.1.1.1.A

FIGURE 3.1.1.7.3–1 ON–ORBIT TEMPORARY PROTRUSIONS ENVELOPE

3.1.1.7.4 ON–ORBIT MOMENTARY PROTRUSIONS

On–orbit momentary protrusions shall be designed such that they can be eliminated within 30 seconds.

3.1.1.7.5 ON–ORBIT PROTRUSIONS FOR KEEP ALIVE PAYLOADS

A. On–orbit protrusions for keep alive payloads experiments, (these are only power/data cables and thermal hoses) shall be limited to no more than 500 square inches within the envelope shown in Figure 3.1.1.7.5–1.

Note: The sum of the on–orbit semi–permanent protrusions and the on–orbit protrusion for keep alive payloads is limited to no more than 500 square inches.

B. The following two requirements are applicable only to the Habitat Holding Racks, Advanced Animal Habitat, Aquatic Habitat, Cell Culture Unit, Egg Incubator, Insect Habitat, Plant Research Unit, Incubator, Refrigerated Centrifuge.

(1) The mated low temperature fluid line connector and associated connection hardware shall be limited to 100 square inches within the envelope shown in Figure 3.1.1.7.5–2. The ISIS drawer fluid lines are to be pulled under the 2–inch protrusion envelope shown in Figure 3.1.1.7.5–3 as soon as the bend radius allows.

(2) The air filters and low temperature fluid lines shall be limited to 900 square inches within the envelope shown in Figure 3.1.1.7.5–3.

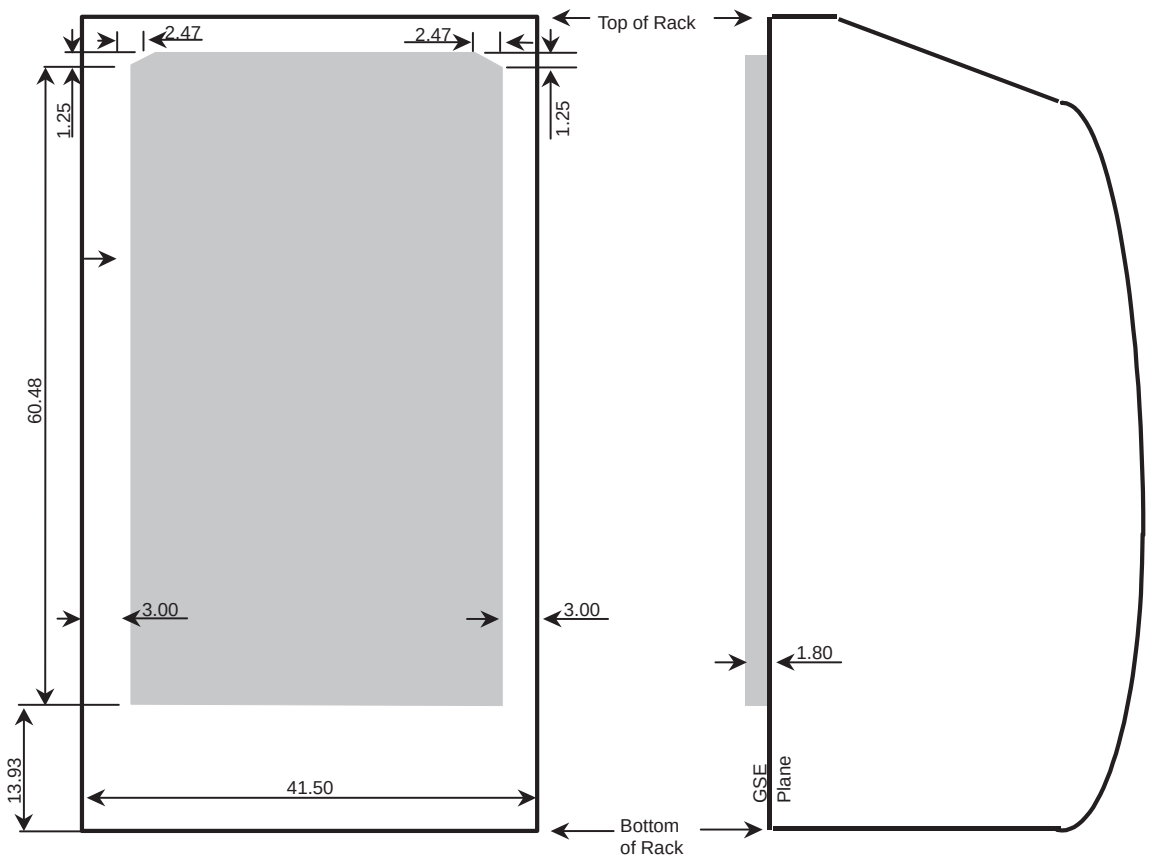

All dimensions are in inches

Note: Protrusions are limited to 1.3 inches for ground processing and launch/landing as described in paragraph 3.1.1.1.A.

FIGURE 3.1.1.7.5–1 ON–ORBIT PROTRUSIONS FOR KEEP ALIVE PAYLOADS ENVELOPE

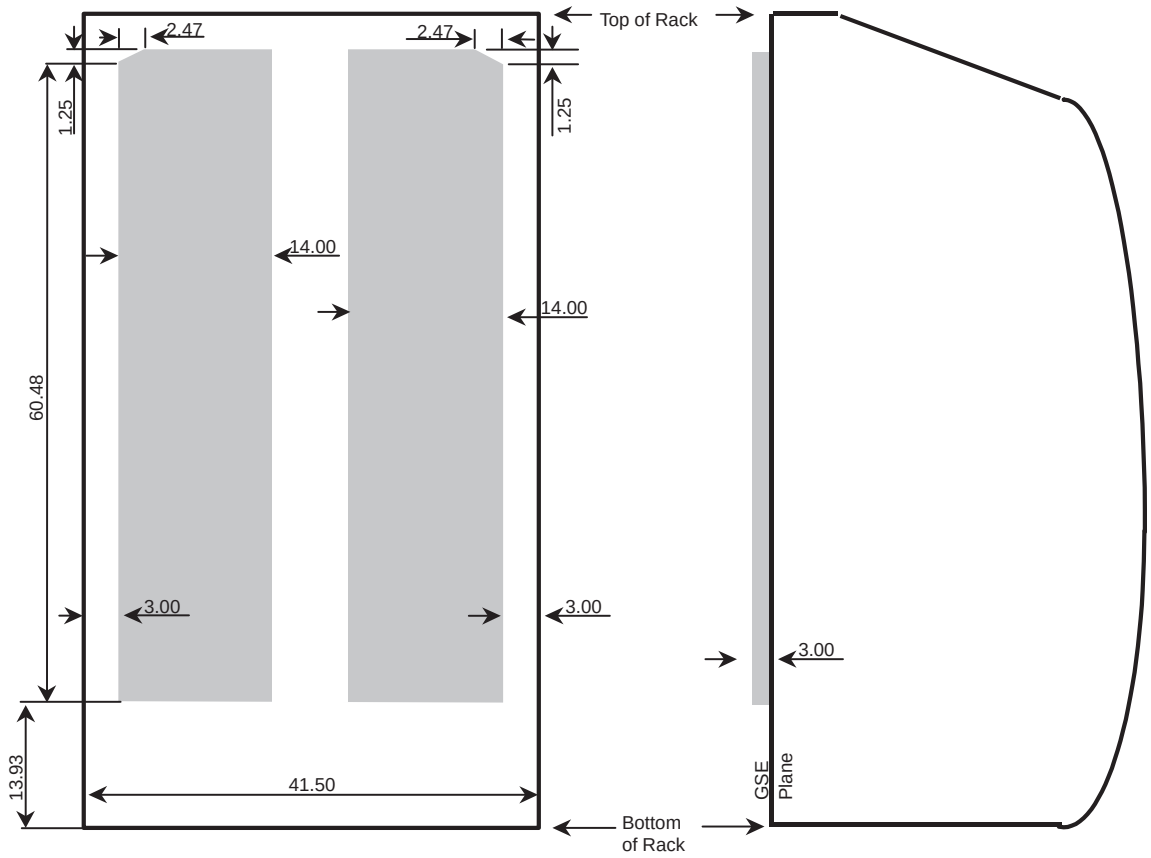

All dimensions are in inches

FIGURE 3.1.1.7.5–2 ISIS FLUID LINE ENVELOPE FOR 3–INCH PROTRUSIONS

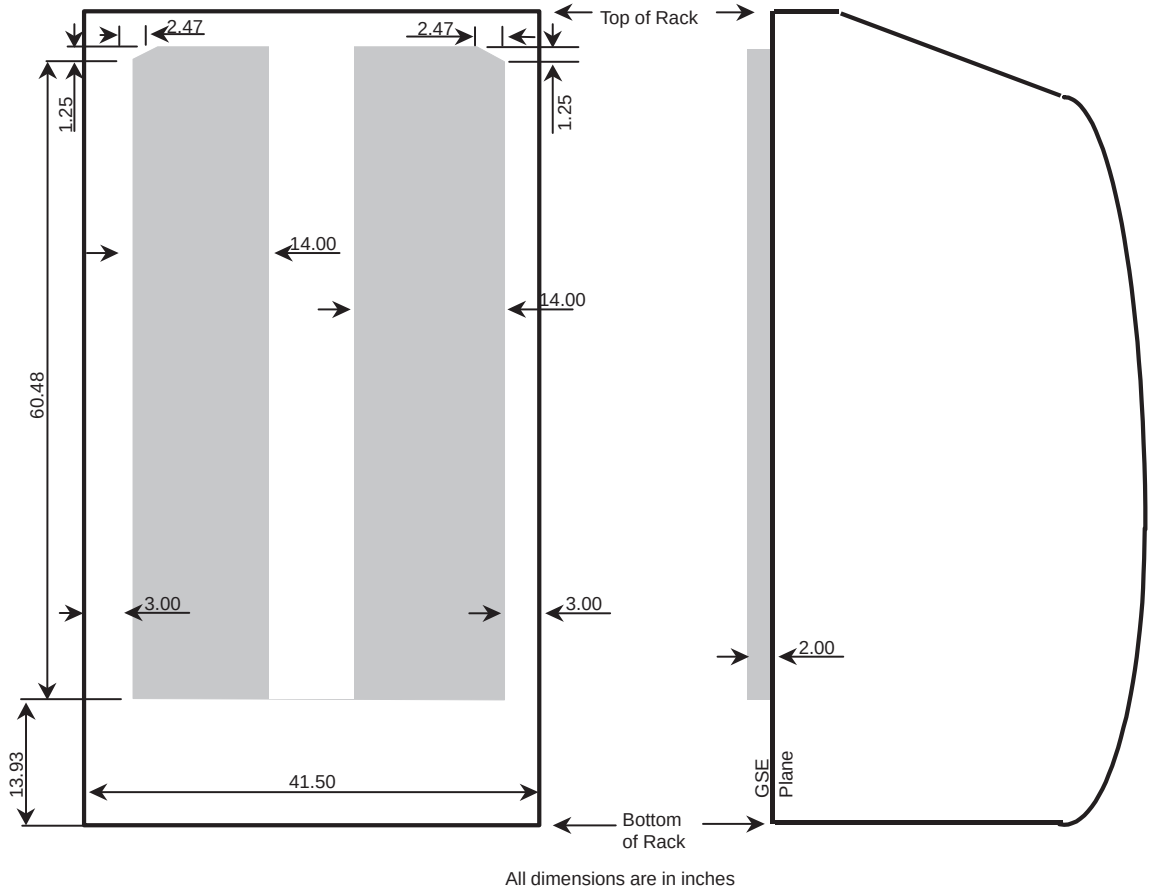

FIGURE 3.1.1.7.5–3 ISIS FLUID LINE ENVELOPE FOR 2–INCH PROTRUSIONS

3.1.2 MICROGRAVITY

3.1.2.1 QUASI-STEADY REQUIREMENTS

A. Integrated racks shall meet the **(TBD #1)** quasi–steady disturbance requirement.

B. During microgravity isolation, ARIS Integrated racks shall meet the quasi–steady disturbance requirements in accordance with the SSP **(TBD #2)** ARIS IDD, to avoid bumping.

3.1.2.2 VIBRATORY REQUIREMENTS

A. Integrated racks shall limit vibroacoustic disturbances to Table **(TBD #3)**.

B. During microgravity isolation, integrated ARIS racks shall meet the vibroacoustic disturbance requirements in accordance with the SSP **(TBD #4)** ARIS IDD, to avoid bumping.

3.1.2.3 TRANSIENT REQUIREMENTS

A. Integrated racks shall meet the **(TBD #5)** transient disturbance requirement.

B. During microgravity isolation, integrated ARIS racks shall meet the transient disturbance requirements in accordance with the SSP **(TBD #6)** ARIS IDD.

3.1.2.4 MICROGRAVITY ENVIRONMENT

The microgravity environment is documented in section 3.9, Environments.

3.1.2.5 ARIS INTERFACES

3.1.3 STOWAGE

Stowage interface information is provided in SSP 50467, ISS Stowage Accommodations Handbook: Pressurized Volume.

3.2 ELECTRICAL INTERFACE REQUIREMENTS

3.2.1 ELECTRICAL POWER CHARACTERISTICS

Electrical power characteristics are specified in this section for two interfaces, Interfaces B and C, as depicted in Figure 3.2.1–1, Electrical Power System Interface Locations. Integrated racks, payload associated hardware and payload hardware connected to Utility Outlet Panels (UOPs) in the USL, JEM, and CAM or the Standard Utility Panels (SUP) in the APM are required to be compatible with the prescribed characteristics of the Electrical Power System (EPS). For purposes of this specification, compatibility is defined as operating without producing an unsafe condition or one that could result in damage to ISS equipment or payload hardware.

3.2.1.1 STEADY-STATE VOLTAGE CHARACTERISTICS

3.2.1.1.1 INTERFACE B

The Electrical Power Consuming Equipment (EPCE) at Interface B shall operate and be compatible with the steady-state voltage limits of 116 to 126 Vdc.

3.2.1.1.2 INTERFACE C

The EPCE at Interface C shall operate and be compatible with the steady-state voltage limits of 113 to 126 Vdc.

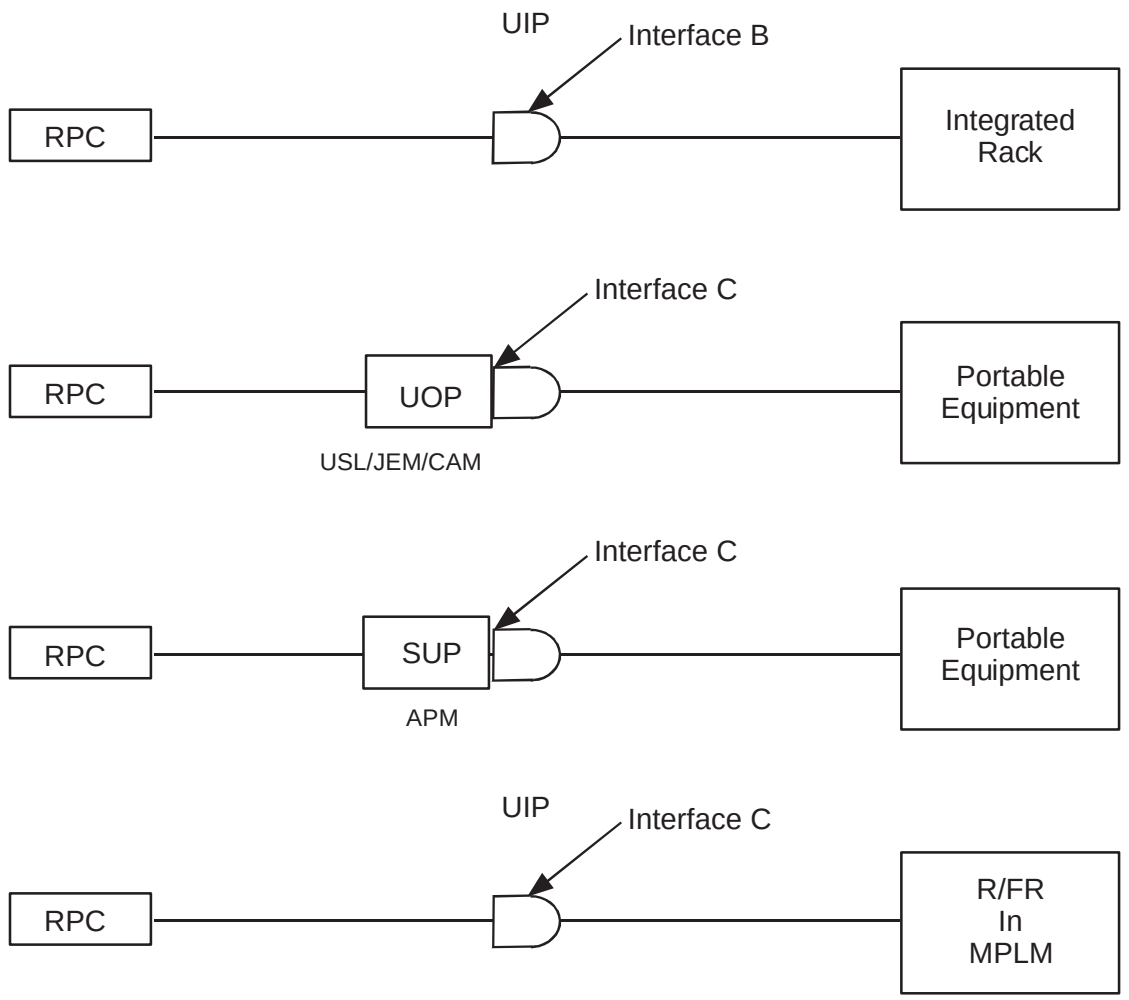

FIGURE 3.2.1–1 ELECTRICAL POWER INTERFACE LOCATIONS

3.2.1.2 RIPPLE VOLTAGE CHARACTERISTICS

3.2.1.2.1 RIPPLE VOLTAGE AND NOISE

The Integrated rack connected to Interface B and EPCE (or Integrated rack in MPLM) connected to Interface C shall operate and be compatible with the EPS time domain ripple voltage and noise level of 2.5 Vrms maximum within the frequency range of 30 Hz to 10k Hz.

3.2.1.2.2 RIPPLE VOLTAGE SPECTRUM

The Integrated rack connected to Interface B and EPCE (or Integrated rack in MPLM) connected to Interface C shall operate and be compatible with the EPS ripple voltage spectrum as shown in Figure 3.2.1.2.2–1.

Note: This limit is 6 dB below the EMC CS-01, CS–02 requirement in SSP 30237 up to 30 MHz.

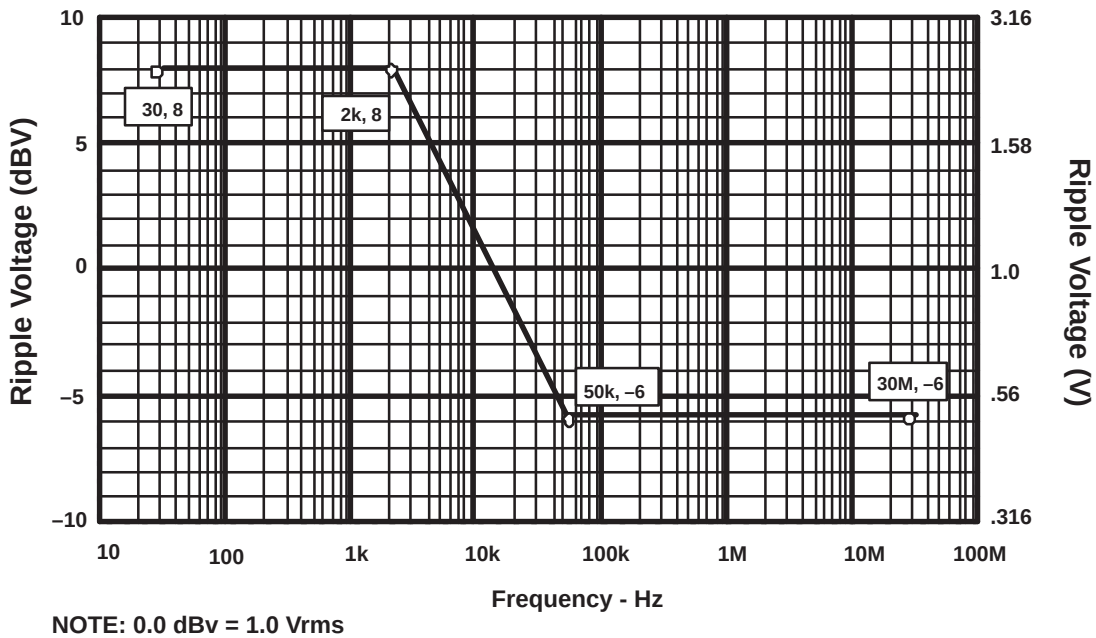

FIGURE 3.2.1.2.2–1 MAXIMUM INTERFACES B AND C RIPPLE VOLTAGE SPECTRUM

3.2.1.3 TRANSIENT VOLTAGES

3.2.1.3.1 INTERFACE B

The EPCE at Interface B shall operate and be compatible with the limits of magnitude and duration for the voltage transients at Interface B as shown in Figure 3.2.1.3.1–1. The envelope shown in this Figure applies to the transient responses exclusive of any periodic ripple and/or random noise components that may be present.

3.2.1.3.2 INTERFACE C

The EPCE at Interface C shall operate and be compatible with the limits of magnitude and duration for the voltage transients at Interface C as shown in Figure 3.2.1.3.2–1. The envelope shown in this Figure applies to the transient responses exclusive of any periodic ripple or noise components that may be present.

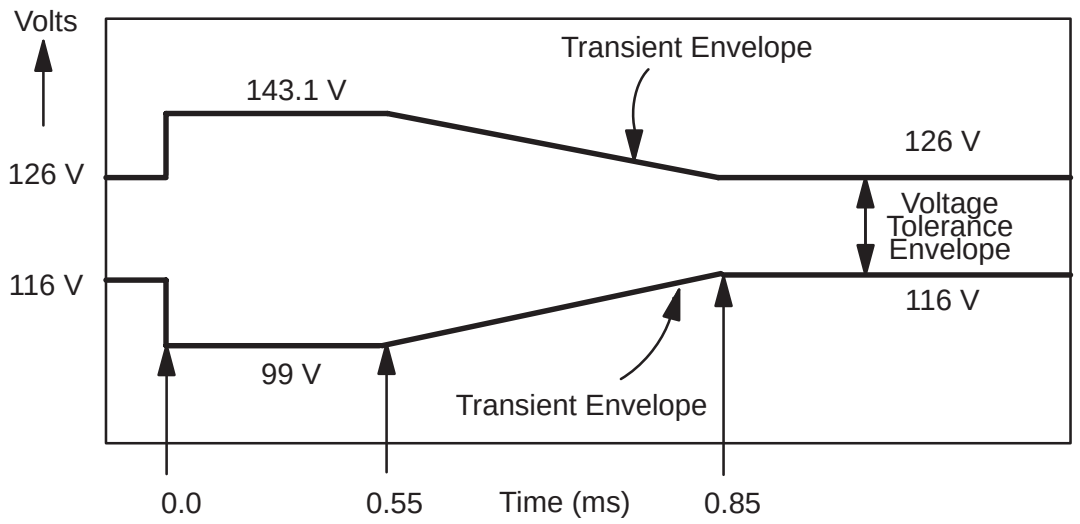

FIGURE 3.2.1.3.1–1 INTERFACE B VOLTAGE TRANSIENTS

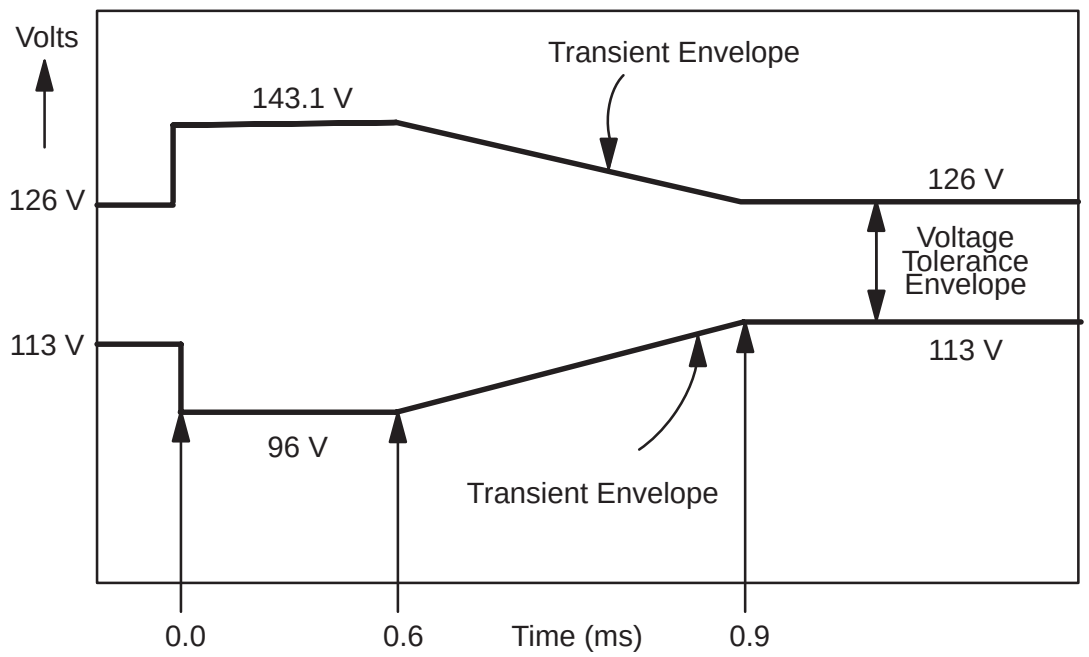

FIGURE 3.2.1.3.2–1 INTERFACE C VOLTAGE TRANSIENTS

3.2.1.3.3 FAULT CLEARING AND PROTECTION

The EPCE connected to either Interface B or Interface C shall be safe and not suffer damage with the transient voltage conditions that are within the limits shown in Figure 3.2.1.3.3–1. Loads may be exposed to transient overvoltage conditions during operation of the power system's fault protection components.

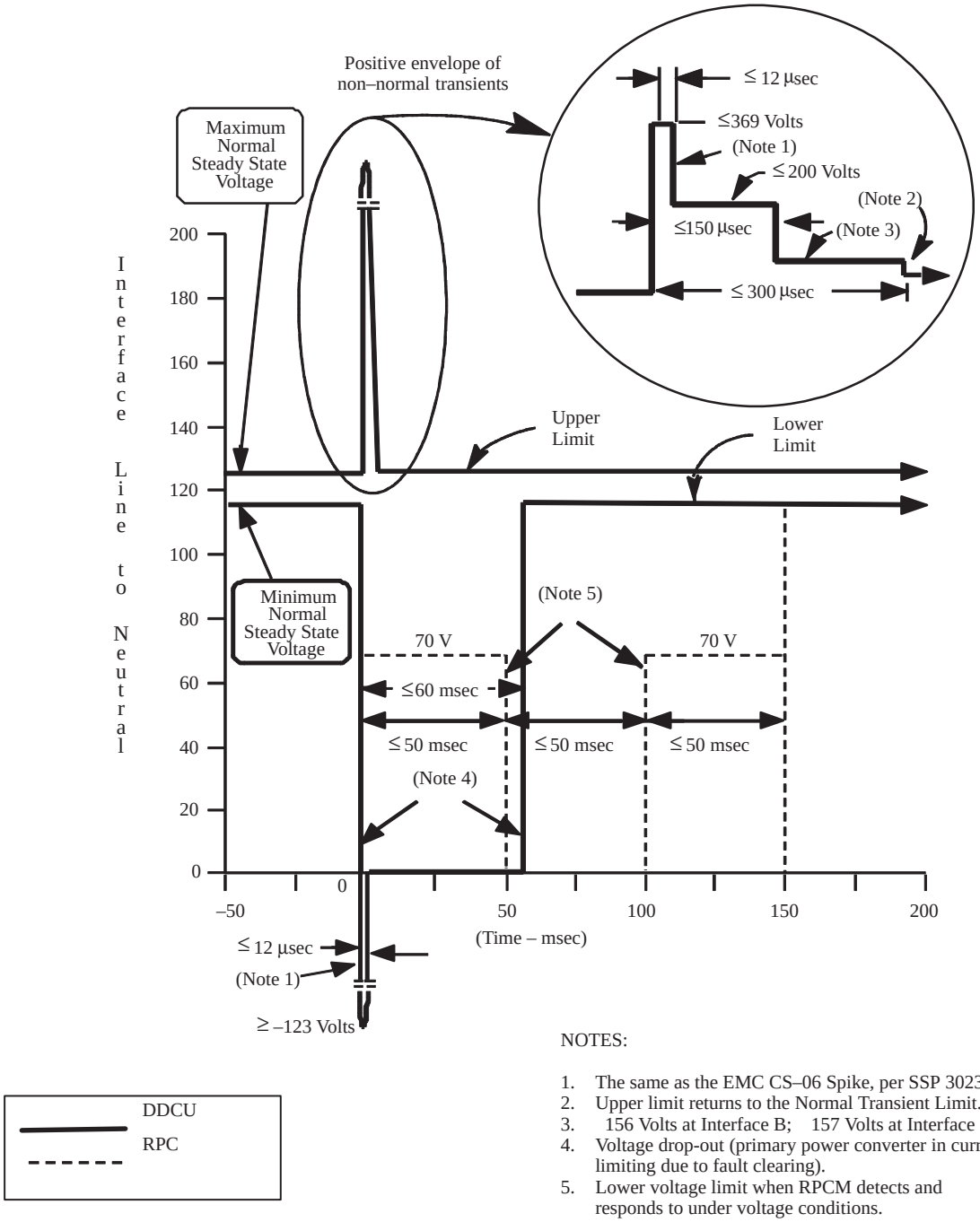

NOTES:

1. The same as the EMC CS–06 Spike, per SSP 30237.
2. Upper limit returns to the Normal Transient Limit.
3. 156 Volts at Interface B; 157 Volts at Interface C.
4. Voltage drop-out (primary power converter in current limiting due to fault clearing).
5. Lower voltage limit when RPCM detects and responds to under voltage conditions.

FIGURE 3.2.1.3.3–1 FAULT CLEARING AND PROTECTION TRANSIENT LIMITS

3.2.1.3.4 NON-NORMAL VOLTAGE RANGE

The Integrated rack connected to Interface B and EPCE connected to Interface C shall not produce an unsafe condition or one that could result in damage to ISS equipment or payload hardware with the following non-normal voltage characteristics:

A. Maximum overvoltage of + 165 Vdc for 10 sec.

B. Undervoltage conditions of +102 Vdc for an indefinite period of time.

3.2.1.4 DELETE

3.2.2 ELECTRICAL POWER INTERFACE

3.2.2.1 UIP AND UOP CONNECTORS AND PIN ASSIGNMENTS

A. Integrated rack connectors P1 and P2 mating requirements to the UIP connectors J1 and J2 are specified in paragraph 3.1.1.6.1, A and B.

B. Integrated rack connectors P1 and P2 shall meet the pin out interfaces of the UIP connectors J1 and J2 as specified in SSP 57001, paragraph 3.2.1.1.

C. Integrated rack connectors P1 and P2 shall meet the requirements of SSQ 21635 or equivalent.

D. EPCE connectors P3 and P4 mating requirements to the UOP connectors J3 and J4 are specified in paragraph 3.1.1.6.1, X, Y, and Z.

E. EPCE connectors P3 and P4 shall meet the pin out interfaces of the UOP connectors J3 and J4 as specified in SSP 57001, paragraph 3.2.1.2.

F. EPCE connectors P3 and P4 shall meet the requirements of SSQ 21635 or equivalent.

3.2.2.2 POWER BUS ISOLATION

A. Integrated rack locations requiring power from two independent ISS power buses shall provide a minimum of 1-megohm isolation in parallel with not more than 0.03 microfarads of mutual capacitance within internal and external rack EPCE at all times such that no single failure shall cause the independent power buses to be electrically tied. (Mutual capacitance is defined as line-to-line capacitance, exclusive of the EMI input filter.)

B. Integrated rack internal and external EPCE shall not use diodes to electrically tie together independent ISS power bus high side or return lines. These requirements apply to both supply and return lines.

ISS provides the capability to support simultaneous use of Main (J1) and Auxiliary (J2) power at each ISPR location (except MPLM). Constrained element level payload operations may occur from individual payload racks which automatically switch to or require simultaneous use of auxiliary power. ISS is required to reserve the maximum auxiliary power needed on that channelized Bus (even when not in use) to prevent Bus overload. For this reason, auxiliary power feeds will nominally be powered off by the module RPC. Specific constraints on the use of auxiliary power will be defined in the payload unique ICD.

3.2.2.3 COMPATIBILITY WITH SIFT START/STOP RPC

An integrated rack or EPCE connected to either Interface B or Interface C, respectively, shall initialize with the soft start/stop performance characteristics when power is applied, sustained, and removed by control of remote power control switches. The soft start/stop function, active only when the Remote Power Controller (RPC) is commanded on or off, is limited to 100 amps/ms, or less, by the RPC output. The response of the soft start/stop function is linear for resistive loads for 1 to 10 ms for U.S. LAB feeds, 1 to 2 ms for JEM main, and 0.2 ms for JEM 10 amp auxiliary feeds, and 1 to 5 ms for APM feeds between 0 amp and rated current level.

Note: Soft start/stop characteristics of U.S. standard RPCMs are shown in Figure 3.2.2.3–1.

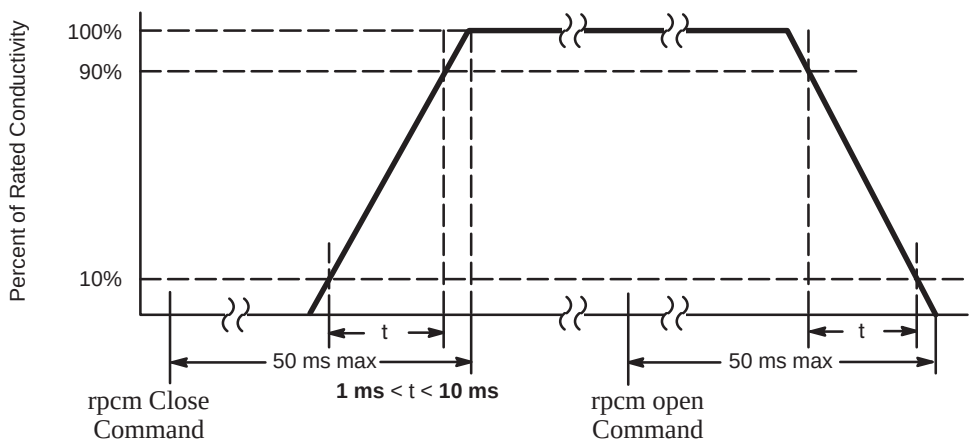

FIGURE 3.2.2.3–1 U.S. RPCM SOFT START/STOP CHARACTERISTICS

3.2.2.4 SURGE CURRENT

The EPCE connected to either Interface B or Interface C electrical interface surge current at the power inputs shall not exceed the surge current values defined in Figures 3.2.2.4–1 and 3.2.2.4–2 when powered from a voltage source with characteristics specified in paragraphs 3.2.1 and 3.2.2.3, with the exception that the source impedance is considered to be 0.1 ohm. The duration of the surge current shall not exceed 10 ms. These requirements apply to all operating modes and changes including power-up and power-down.

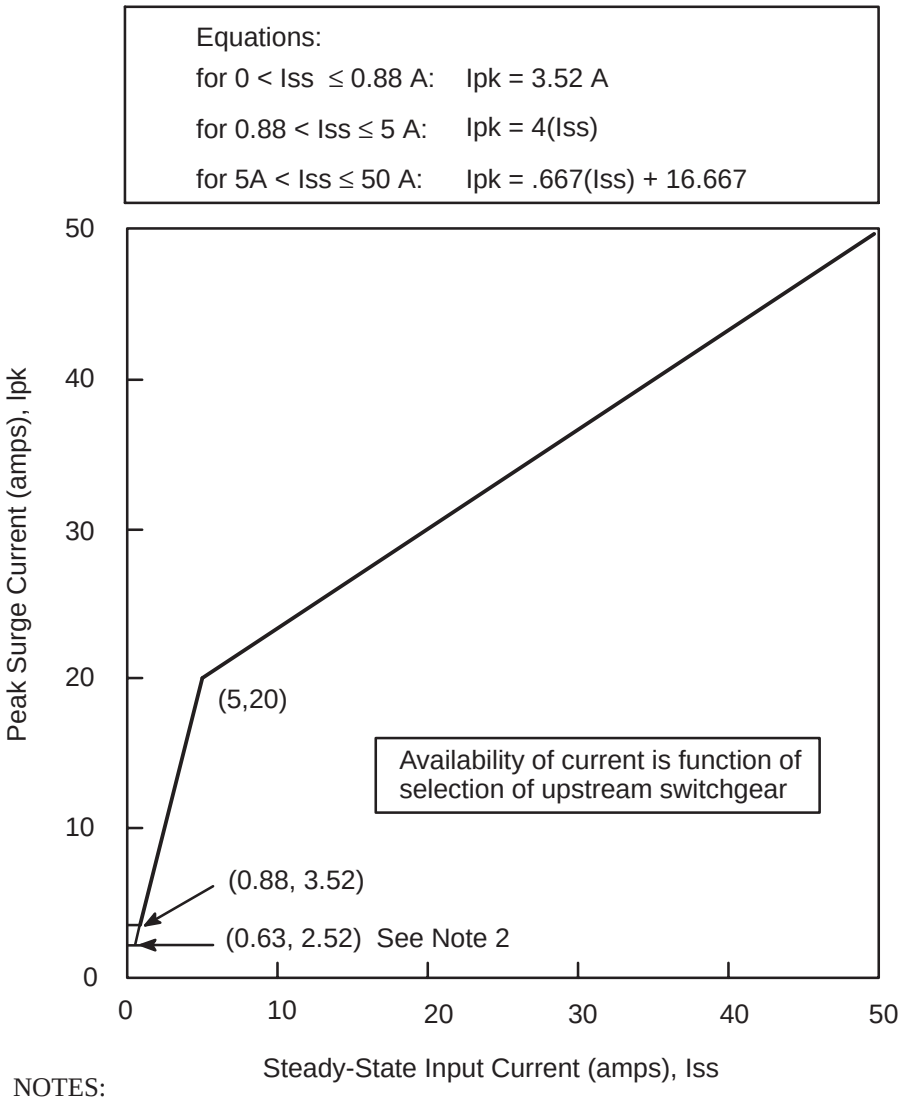

NOTES:

1. For transients less than 100 microseconds, refer to SSP 30237.
2. NASA Space Station equipment accommodated in JEM will have a maximum allowable peak surge current of 2.52 amps for equipment having a steady-state input no greater than 0.63 amps.

FIGURE 3.2.2.4–1 PEAK SURGE CURRENT AMPLITUDE VERSUS STEADY-STATE INPUT CURRENT

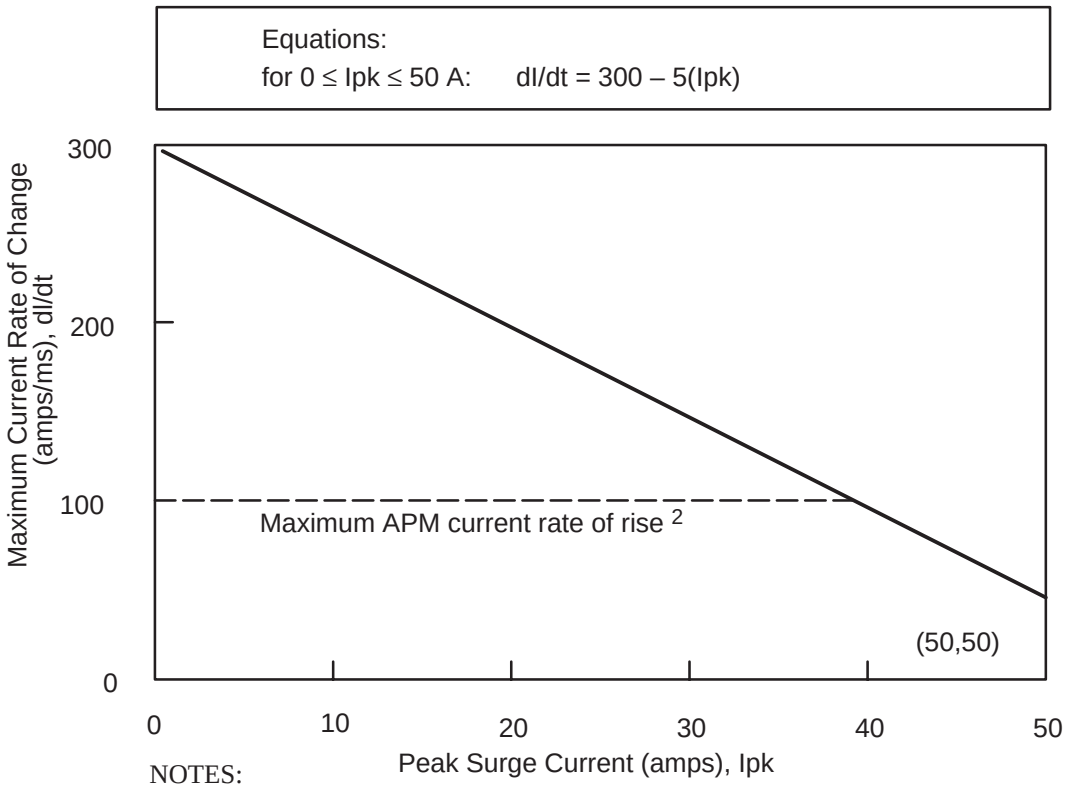

NOTES:

1. For transients less than 100 microseconds, refer to SSP 30237.
2. NASA Space Station and ISPR payload equipment accommodated in APM shall function correctly with a maximum current rate of rise of 100 amps/ms up to 40-amps peak surge current.

FIGURE 3.2.2.4–2 MAXIMUM CURRENT RATE OF CHANGE VERSUS PEAK SURGE CURRENT AMPLITUDE

3.2.2.5 REVERSE ENERGY/CURRENT

The integrated rack electrical interface main input power and Auxiliary input power shall comply with the requirements defined in Table 3.2.2.5–1 for the reverse energy/current into the upstream power source. The integrated rack interface shall meet either the reverse energy or the reverse current requirement for all environmental conditions specified in this document when powered from a voltage source with characteristics specified in paragraphs 3.2.1 and 3.2.2.3 with a source impedance of 0.1 ohm.

TABLE 3.2.2.5–1 MAXIMUM REVERSE ENERGY/CURRENT FROM DOWNSTREAM LOADS

ISPR INTERFACE Power/RPCM type	MAXIMUM REVERSE ENERGY (Joules)	MAXIMUM REVERSE CURRENT (amps)		
		Pulse t < 10 µs	Peak t < 1 ms	Steady State t > 1 s
3 kW / type VI	3.0	400	250	3
6 kW / type III	6.0	800	500	6
JEM	**(TBD #7)**	**(TBD #7)**	**(TBD #7)**	**(TBD #7)**
ESA	**(TBD #8)**	**(TBD #8)**	**(TBD #8)**	**(TBD #8)**
UOP Type 1	1.5	400	250	2
UOP Type V	1.5	400	250	2
µs = microseconds ms = milliseconds s = second				

3.2.2.6 CIRCUIT PROTECTION DEVICES

3.2.2.6.1 ISS EPS CIRCUIT PROTECTION CHARACTERISTICS

3.2.2.6.1.1 REMOTE POWER CONTROLLERS (RPCs)

A. The Integrated rack connected to an Interface B ISPR location shall operate and be compatible with the characteristics in Figures 3.2.6–2, 3.2.6–3, and 3.2.6–4 as described in paragraph 3.2.6 located in SSP 57001.

B. The Integrated rack connected to a MPLM powered rack location shall operate and be compatible with the characteristics in Figure 3.2.6–6 as described in paragraph 3.2.6 located in SSP 57001.

C. The EPCE connected to a UOP shall operate and be compatible with the characteristics in Figure 3.2.6–5 as described in paragraph 3.2.6 located in SSP 57001.

D. Overcurrent protection shall be provided at all points in the system where power is distributed to lower level (wire size not protected by upstream circuit protection device) feeder and branch lines.

E. The Integrated rack connected to Interface B shall provide current limiting overcurrent protection for all internal loads (exclusive of overcurrent protection circuits and devices) drawing power from an interface B power feed. For the purpose of this requirement, internal overcurrent protection circuits and devices are not considered to be loads.

3.2.2.6.2 EPCE RPC INTERFACE REQUIREMENTS

3.2.2.6.2.1 RPC TRIP COORDINATION

3.2.2.6.2.1.1 PAYLOAD TRIP RATINGS

The payload power circuit protection device in the integrated rack connected to Interface B shall be designed to provide trip coordination, i.e., the downstream circuit protection device disconnects a shorted circuit or an overloaded circuit from the upstream power interface without tripping the upstream circuit protection device. The trip coordination is achieved either by shorter trip time or lower current limitation than the upstream protection devices defined in Paragraph 3.2.2.6.1.1.A.

3.2.2.6.2.1.2 DELETED

3.2.2.7 EPCE COMPLEX LOAD IMPEDANCES

3.2.2.7.1 INTERFACE B

A. The load impedance presented by the integrated rack to the Main Interface B shall not exceed the bounds defined by Figures 3.2.2.7.1–1 and 3.2.2.7.1–2 for input over the frequency range of 50 Hz to 100 kilohertz (kHz). The magnitude component of the integrated rack input impedance should not be less than the minimum defined in Figures 3.2.2.7.1–1 and 3.2.2.7.1–2. At frequencies where the magnitude component of the integrated rack input impedance is less than the defined minimum, the phase component of the input impedance shall not exceed the bounds defined in these Figures.

B. The load impedance presented by the integrated rack to the 1.2 to 1.44 kW Interface B shall not exceed the bounds defined by Figure 3.2.2.7.1–3 for input over the frequency range of 50 Hz to 100 kilohertz (kHz). The magnitude component of the integrated rack input impedance should not be less than the minimum defined in Figure 3.2.2.7.1–3. At

frequencies where the magnitude component of the integrated rack input impedance is less than the defined minimum, the phase component of the input impedance shall not exceed the bounds defined in this Figure.

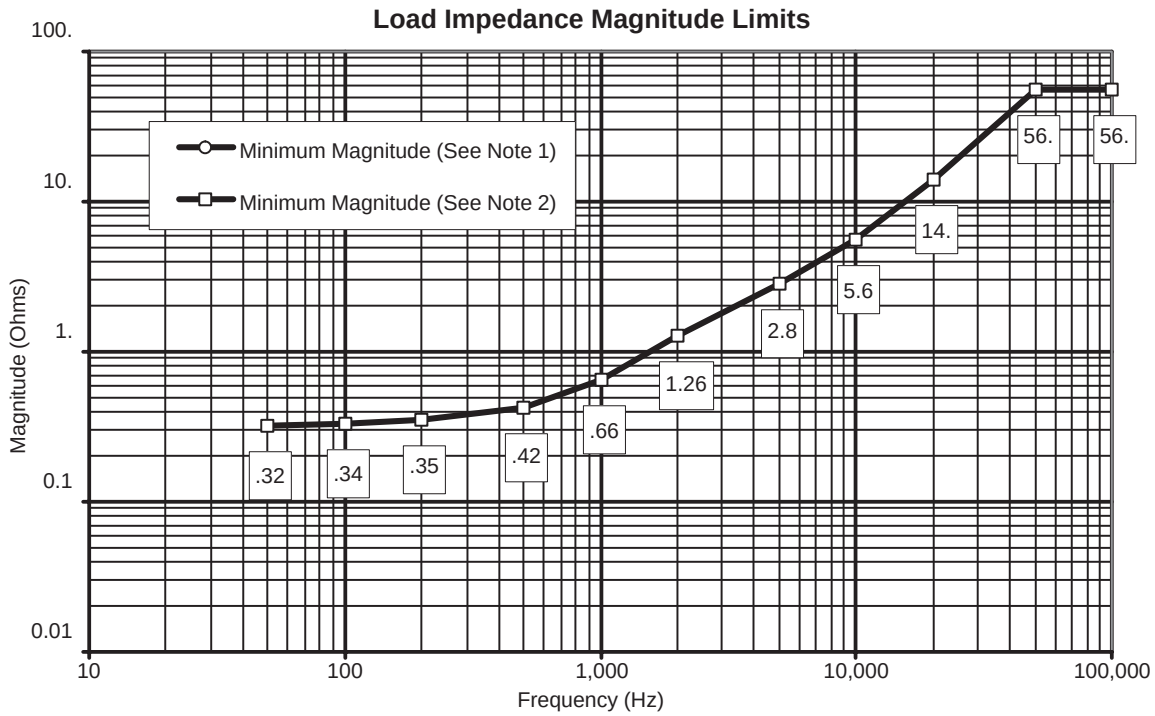

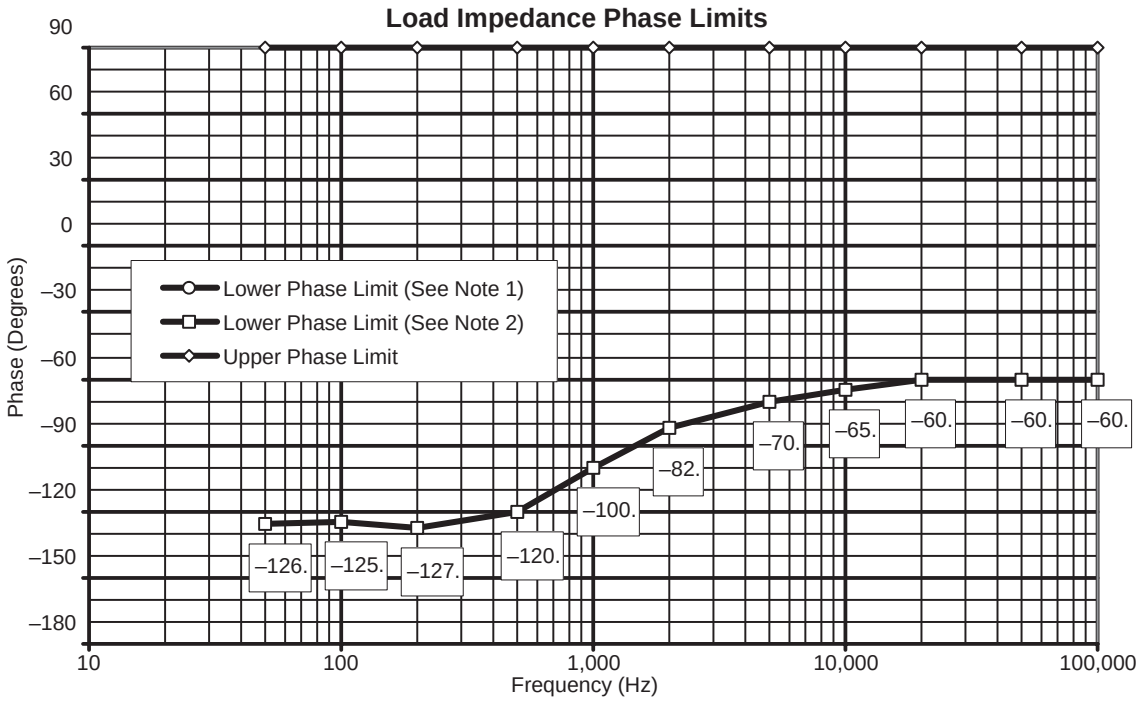

Notes:

1. Limit when total load on the Secondary Power Source is less than 400 watts.
2. Limit when total load on the Secondary Power Source is at least 400 watts.

FIGURE 3.2.2.7.1–1 3KW INTERFACE B LOAD IMPEDANCE LIMITS

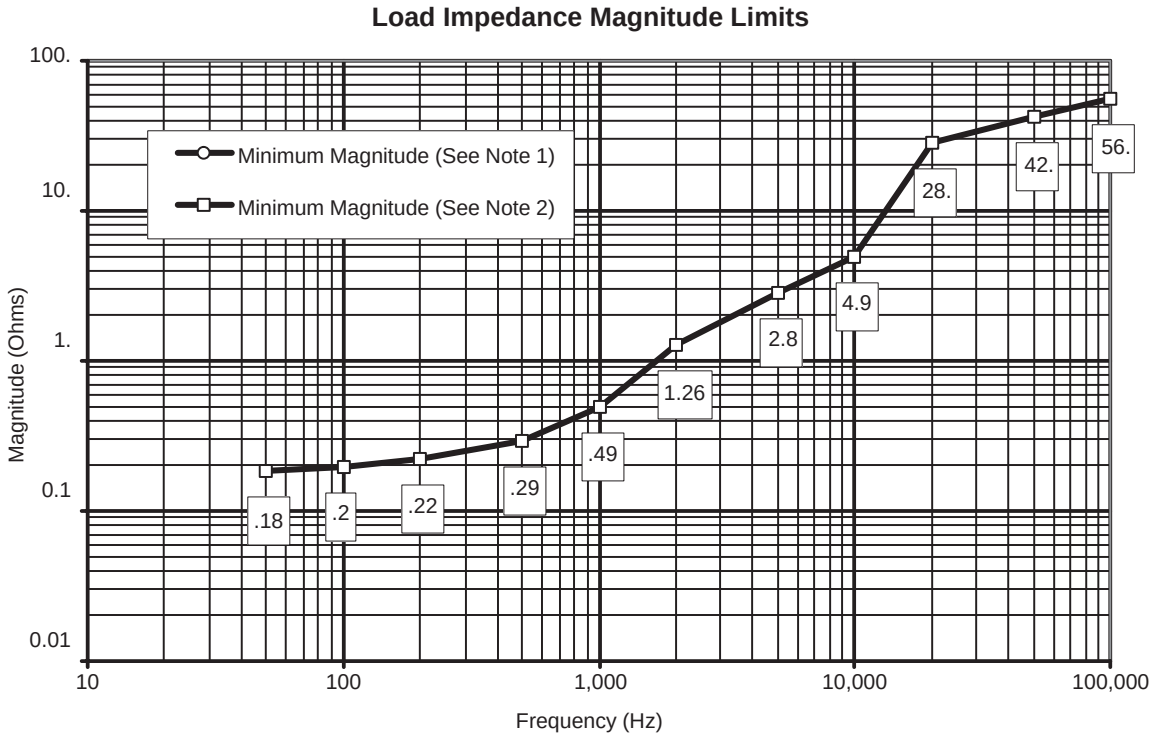

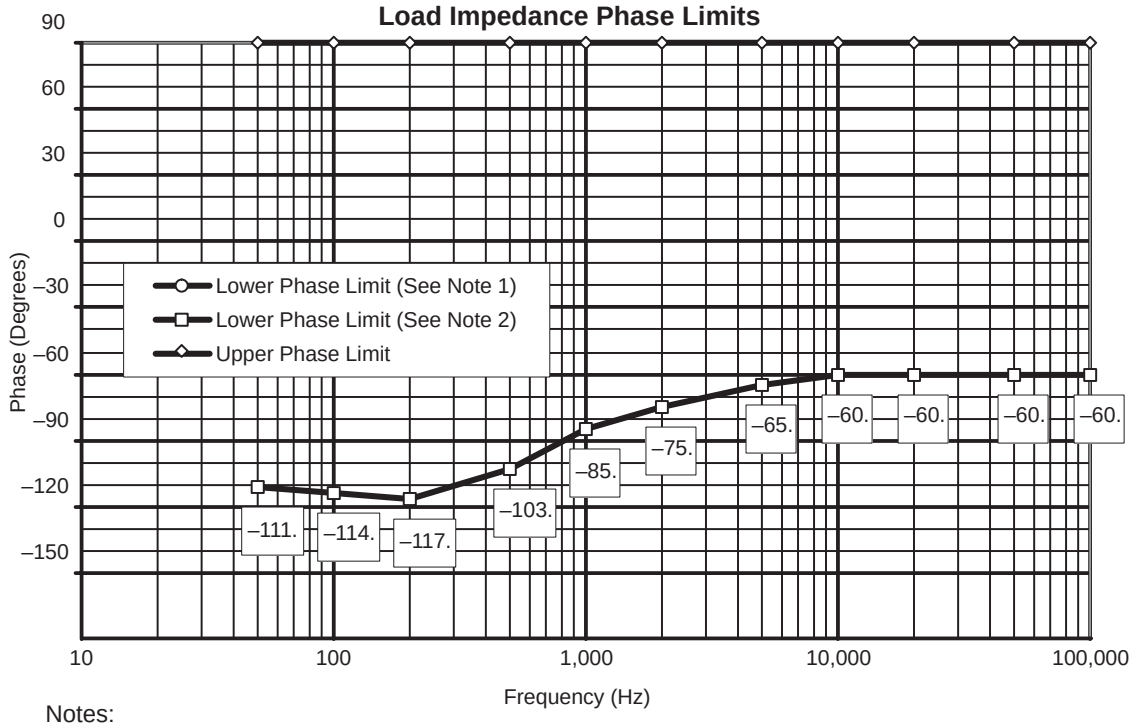

Notes:

1. Limit when total load on the Secondary Power Source is less than 400 watts.
2. Limit when total load on the Secondary Power Source is at least 400 watts.

FIGURE 3.2.2.7.1–2 6 KW INTERFACE B LOAD IMPEDANCE LIMITS

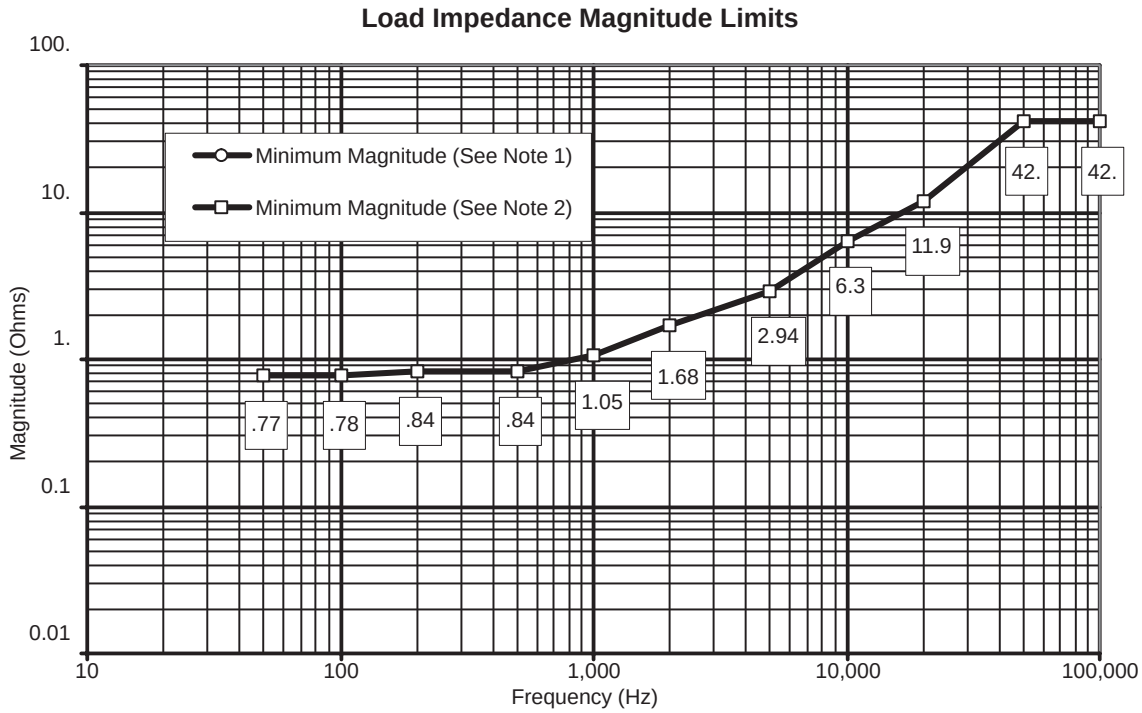

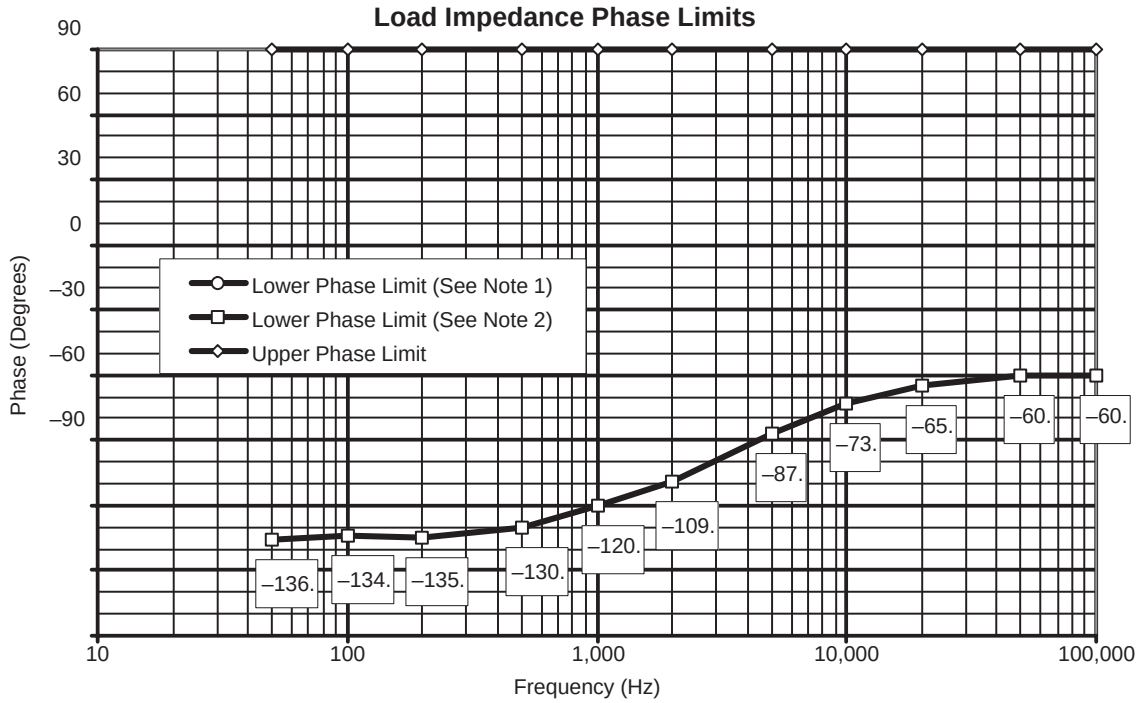

Notes:

1. Limit when total load on the Secondary Power Source is less than 400 watts.
2. Limit when total load on the Secondary Power Source is at least 400 watts.

FIGURE 3.2.2.7.1–3 1.2 TO 1.44 KW AUXILIARY INTERFACE B LOAD IMPEDANCE LIMITS

3.2.2.7.2 INTERFACE C

The load impedance presented by the EPCE to Interface C shall not exceed the bounds defined by Figure 3.2.2.7.2–1 for input over the frequency range of 50 Hz to 100kHz. The magnitude component of the EPCE input impedance should not be less than the minimum defined in Figure 3.2.2.7.2–1. At frequencies where the magnitude component of the EPCE input impedance is less than the defined minimum, the phase component of the input impedance shall not exceed the bounds defined in this Figure.

3.2.2.8 LARGE SIGNAL STABILITY

The integrated rack connected to Interface B and the EPCE connected to Interface C shall maintain stability with the ISS EPS interface by damping a transient response to 10 percent of the maximum response amplitude within 1.0 millisecond (ms), and remaining below 10 percent thereafter under the following conditions:

1. The rise time/fall time (between 10 and 90 percent of the amplitude) of the input voltage pulse is less than 10 microseconds (s).

2. The voltage pulse is to be varied from 100 to 150 μs in duration.

Note: Figure 3.2.2.8–1 is used to clarify the above requirement.

3.2.2.9 MAXIMUM RIPPLE VOLTAGE EMISSIONS

The maximum ripple voltage induced on the power line by the integrated rack connected to Interface B and the EPCE connected to Interface C shall be no greater than 0.5 V peak-to-peak.

3.2.2.10 ELECTRICAL LOAD-STAND ALONE STABILITY

The Integrated Rack connected to Interface B and EPCE (or Integrated rack in MPLM) connected to Interface C shall provide local stability by meeting the following conducted susceptibility requirements defined in Paragraph 3.2.4.4:

A. Paragraph 3.2.2.1 of SSP 30237 (CS01)

B. Paragraph 3.2.2.2 of SSP 30237 (CS02)

C. Paragraph 3.2.2.3 of SSP 30237 (CS06)

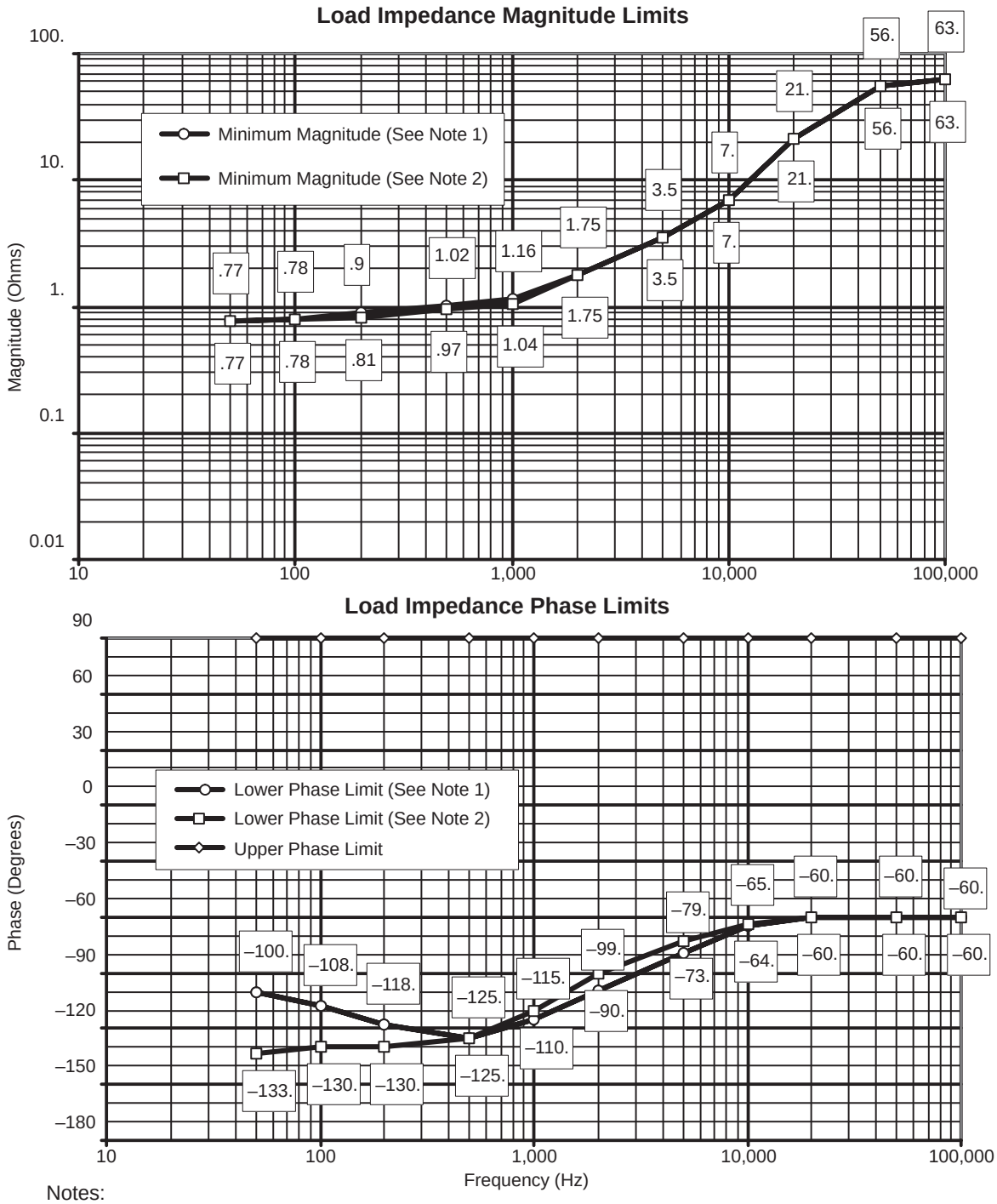

Notes:

1. Limit when total load on the Secondary Power Source is less than 400 watts.
2. Limit when total load on the Secondary Power Source is at least 400 watts.
3. Magnitude and phase curves apply to U.S. LAB, JEM, and COF only.

FIGURE 3.2.2.7.2–1 INTERFACE C LOAD IMPEDANCE LIMITS FOR 10 – 12 AMPERE CIRCUIT RATING

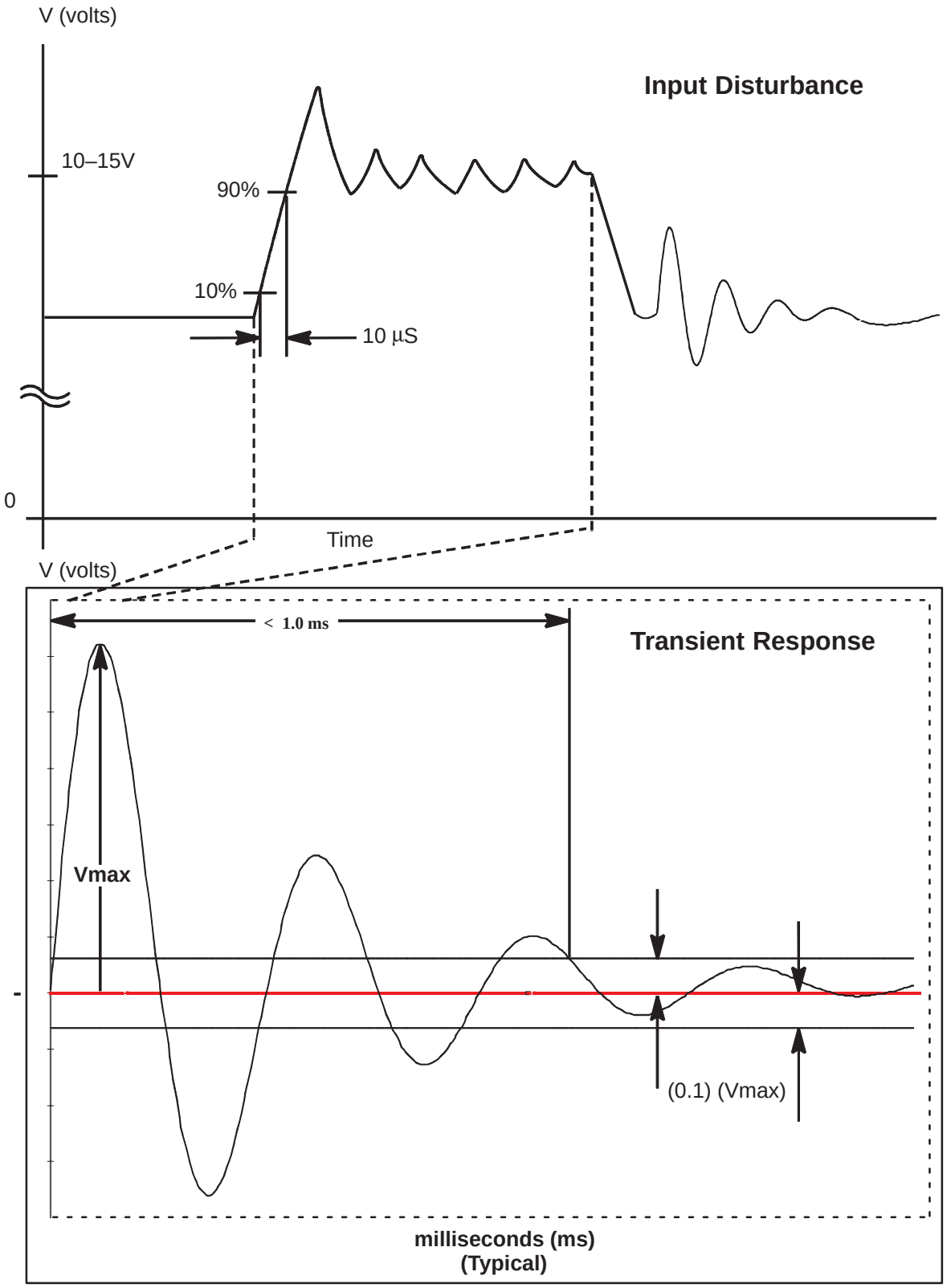

FIGURE 3.2.2.8–1 PULSE APPLIED TO THE POWER INPUT OF THE INTEGRATED RACK OR EPCE

3.2.3 ELECTRICAL POWER CONSUMER CONSTRAINTS

3.2.3.1 WIRE DERATING

A. Wire derating for wire/cable between EPCE and the UOP shall be in accordance with SSP 30312.

B. Derating criteria for EPCE at and downstream of the primary circuit protection device(s) in the integrated rack, as shown in Figure 3.2.3.1–1, shall be per NASA Technical Memo (TM) 102179 as interpreted by NSTS 18798, TA-92-038.

C. Integrated racks shall use 4 gauge wire for main and auxiliary connections at the UIP.

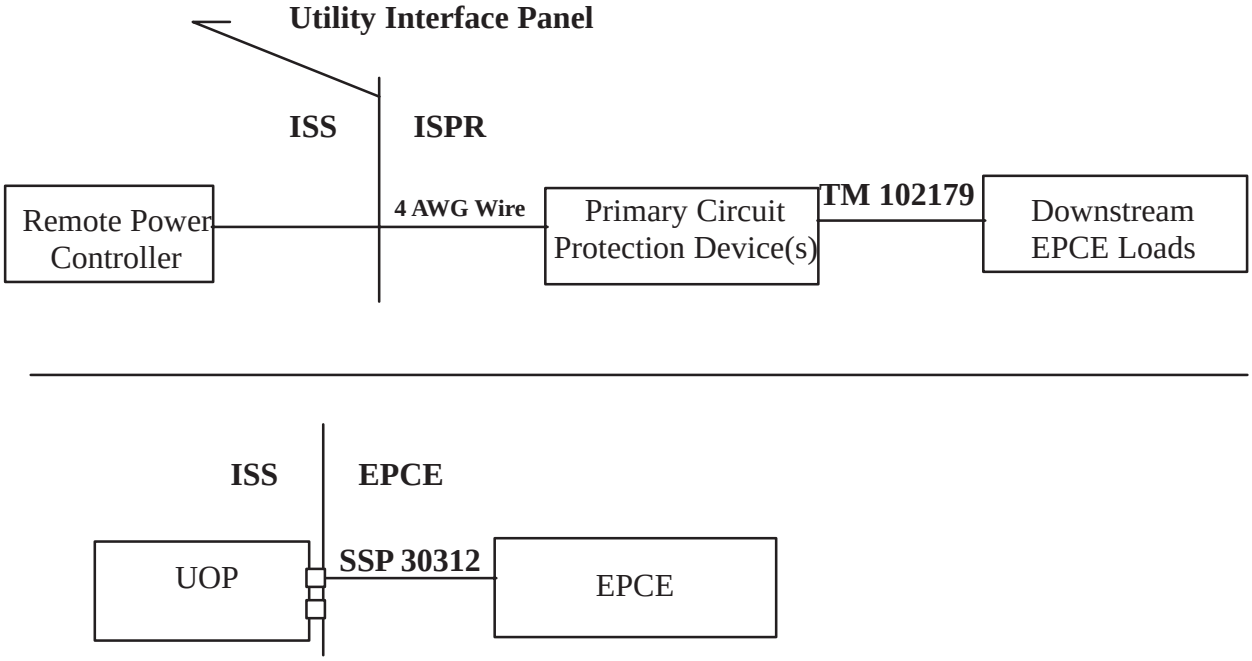

FIGURE 3.2.3.1–1 WIRE DERATING REQUIREMENTS FOR ISPR AND EPCE

3.2.3.2 EXCLUSIVE POWER FEEDS

A. An integrated rack shall receive power only from the UIP dedicated to its rack location.

B. Cabling shall not occur between Interface C connected EPCE with Interface B; and/or Interface B connected EPCE with Interface C.

3.2.3.3 LOSS OF POWER

Payloads shall fail safe in the event of a total or partial loss of power regardless of the availability of Auxiliary power in accordance with NSTS 1700.7, ISS Addendum.

3.2.4 ELECTROMAGNETIC COMPATIBILITY

The Integrated rack connected to Interface B and the EPCE connected to Interface C shall meet the EMC requirements of SSP 30243, paragraphs 3.1 and 3.6.2.

3.2.4.1 ELECTRICAL GROUNDING

The EPCE connected to either Interface B or Interface C shall meet all requirements specified in section 3 of SSP 30240.

3.2.4.2 ELECTRICAL BONDING

The integrated rack shall interface with the module bond strap per SSP 57001 Hardware ICD Template. Electrical bonding of EPCE connected to either Interface B or Interface C shall be in accordance with SSP 30245 and NSTS 1700.7, ISS Addendum sections 213 and 220.

3.2.4.3 CABLE/WIRE DESIGN AND CONTROL REQUIREMENTS

Cabling between payload EPCE and Interface B or Interface C shall meet all Cable and Wire Design requirements of SSP 30242.

3.2.4.4 ELECTROMAGNETIC INTERFERENCE

Payload EPCE shall meet all EMI requirements of SSP 30237.

Alternately, the payload EPCE may choose to accept a minimal increase of EMI risk with a somewhat less stringent Electric Field Radiated Susceptibility (RS03) requirement on equipment considered to be non-safety critical to the vehicle and crew. The tailored RS03 requirement, shown below, will hereafter be denoted RS03PL.

FREQUENCY	RS03PL LIMIT (V/m)
14 kHz – 400 MHz	5
400 MHz – 450 MHz	30
450 MHz – 1 GHz	5
1 GHz – 5 GHz	25
5 GHz – 6 GHz	60
6 GHz – 10 GHz	20
13.7 GHz – 15.2 GHz	25

COMMENTS:

1. The less stringent RS03PL limit was developed to envelope the electric fields generated by ISS transmitters and ground-based radars tasked to perform space surveillance and tracking. Ground-based radars that are not tasked to track the ISS and search radars that could momentarily sweep over the ISS are not enveloped by the relaxed RS03PL. For most scientific payloads, the minimal increase of EMI risk for the reduced limits is acceptable.

The RS03PL limit does not account for module electric field shielding effectiveness that could theoretically reduce the limits even more. Although shielding effectiveness exists, it is highly dependent on the EPCE location within the module with respect to ISS windows.

2. The conducted susceptibility requirements CS01, CS02 and CS06 are also used as the local stability requirements in Paragraph 3.2.2.10.

3.2.4.5 ELECTROSTATIC DISCHARGE

Unpowered EPCE and components shall not be damaged by Electrostatic Discharge (ESD) equal to or less than 4,000 V to the case or any pin on external connectors. EPCE that may be damaged by ESD between 4,000 and 15,000 V shall have a label affixed to the case in a location clearly visible in the installed position. Labeling of EPCE susceptible to ESD up to 15,000 V shall be in accordance with MIL–STD–1686. These voltages are the result of charges that may be accumulated and discharged from ground personnel or crewmembers during equipment installation or removal.

3.2.4.6 ALTERNATING CURRENT (AC) MAGNETIC FIELDS

The generated ac magnetic fields, measured at a distance of 7 centimeters (cm) from the generating equipment, shall not exceed 140 dB above 1 picotesla for a frequencies ranging from 30 Hz to 2kHz, then falling 40 dB per decade to 50 kHz.

3.2.4.7 DIRECT CURRENT (DC) MAGNETIC FIELDS

The generated dc magnetic fields shall not exceed 170 dB picotesla at a distance of 7 cm from the generating equipment. This applies to electromagnetic and permanent magnetic devices.

3.2.4.8 CORONA

Electrical and electronic subsystems, equipment, and systems shall be designed to preclude damaging or destructive corona in its operating environment. Guidance for meeting the corona requirement is found in MSFC–STD–531, High Voltage Design Criteria.

3.2.4.9 LIGHTNING

The integrated rack and EPCE shall meet the lightning induced environment requirement in paragraph 3.2.8.1 of SSP 30243.

3.2.4.10 EMI SUSCEPTIBILITY FOR SAFETY-CRITICAL CIRCUITS

Payload safety-critical circuits, as defined in SSP 30243, shall meet the margins defined in SSP 30243, paragraph 3.2.3.

3.2.5 SAFETY REQUIREMENTS

3.2.5.1 PAYLOAD ELECTRICAL SAFETY

3.2.5.1.1 MATING/DEMATING OF POWERED CONNECTORS

EPCE shall meet the electrical safety requirements as defined in NSTS 1700.7 Addendum. Payloads shall comply with the requirements for mating/demating of powered connectors specified in NSTS 18798, MA2–97–093.

Note: The module can provide one verifiable upstream inhibit which removes voltage from the UIP and UOP connectors. The module design will provide the verification of the inhibit status at the time the inhibit is inserted.

3.2.5.1.2 SAFETY-CRITICAL CIRCUITS REDUNDANCY

EPCE shall meet the electrical safety requirements as defined in NSTS 1700.7 Addendum. The EPCE connected to either Interface B or Interface C shall meet the safety-critical circuits redundancy requirements defined in NSTS 18798.

3.2.5.2 RACK MAINTENANCE SWITCH (RACK POWER SWITCH)

Each integrated rack shall provide a guarded, two-position, manually operated–switch installed in a visible and accessible location on the front of the rack that removes all power to the integrated rack.

Note: Implementation of the rack maintenance switch through the J43 connector as specified in paragraphs 3.3.10.1 and 3.3.10.3 meets the intent of this requirement, except in the MPLM. The MPLM does not have J43 connectors in rack locations to allow RMS implementation. Paragraph 3.2.5.3 is not required for this implementation.

3.2.5.3 POWER SWITCHES/CONTROLS

The following power switches/controls requirements apply to power to power interfaces with open circuit voltage exceeding 30 volts rms or dc nominal (32 volts rms or dc maximum).

A. Switches/controls performing on/off power functions for all power interfaces shall open (dead-face) all supply circuit conductors except the power return and the equipment grounding conductor while in the power-off position.

B. Power-off markings and/or indications shall be used only if all parts, with the exception of overcurrent devices and associated EMI filters, are disconnected from the supply circuit.

C. Standby, charging, or other descriptive nomenclature shall be used to indicate that the supply circuit is not completely disconnected for this power condition.

3.2.5.4 GROUND FAULT CIRCUIT INTERRUPTERS (GFCI)/PORTABLE EQUIPMENT DC SOURCING VOLTAGE

A. A non-portable utility outlet with output voltages exceeding 30 volts rms or dc nominal (32 volts rms or dc maximum) intended to supply power to portable equipment shall include a GFCI, as an electrical hazard control, in the power path to the portable equipment.

B. GFCI trip current DC detection shall be independent of the portable equipment’s safety (green) wire.

C. GFCI trip current AC detection shall be dependent on the portable equipment’s safety (green) wire when the safety (green) wire is present.

D. Portable equipment that has internal voltages greater than 30 volts rms or dc nominal (32 volts rms or dc maxiumum) and has a credible fault path or return path to a crewmember shall include GFCI protection for that credible path with trip point characteristics such that tripping will not exceed the currents specified in the profile shown in Table 3.2.5.4–1.

E. GFCI will be designed to trip below the threshold of let-go based upon the 99.5 percentile rank of adults. Non-portable utility outlets supplying power to portable equipment shall include a GFCI with trip point characteristics such that tripping will not exceed the currents specified in the profile shown in Table 3.2.5.4–1.

F. GFCIs shall remove power within 25 milliseconds upon encountering the fault current.

G. GFCI shall provide an on-orbit method for testing trip current detection threshold at DC and at a frequency within the maximum human sensitivity range of 15 to 70 Hertz.

Note: The definitions of hazard requirements are specified in NSTS 1700.7, ISS Addendum, paragraph 200.

TABLE 3.2.5.4–1 LET-GO CURRENT PROFILE THRESHOLD VERSUS FREQUENCY

Frequency (Hertz)	Maximum Total Peak Current (AC + DC components combined) (milliamperes)
DC	40
15	8.5
2000	8.5
3000	13.5
4000	15.0
5000	16.5
6000	17.9
7000	19.4
8000	20.9
9000	22.5
10000	24.3
50000	24.3
(Based on 99.5 Percentile Rank of Adults)	

3.2.5.5 PORTABLE EQUIPMENT/POWER CORDS

A. Non-battery powered portable equipment shall incorporate a three-wire power cord. A three–wire power cord consists of a (+) supply lead, a (–) return lead and a safety (green) wire; one end of the safety (green) wire is connected to the portable equipment chassis (and all exposed conductive surfaces) and the other end is connected to structure of the utility outlet (Payload provided outlet, UOP, etc.) or through the GFCI interface if GFCI is used. A system of double insulation or its equivalent, when approved by NASA, may be used without a ground wire.

B. Fault currents resulting from a single failure within a non-battery powered portable equipment that has internal voltage above 30 volts rms or dc nominal (32 volts rms or dc maximum) and has a credible fault path or return path to the crewmember shall not exceed the total peak currents specified in Table 3.2.5.4–1 for fault current frequencies of 15 Hertz and above.

Note: The SUP power outlet in the APM does not provide AC protection.

3.2.5.6 DELETED

3.2.6 MPLM

An integrated rack (including Refrigerator/Freezer Rack) may require power while located in the MPLM. MPLM provides power to high power locations which are able to sustain a maximum steady-state current of 9.8 A and low power locations which are able to sustain a maximum steady-state current of 5.3 A. An integrated rack receiving power from the MPLM electrical power system must meet all requirements in Sections 3.2.6.1 through 3.2.6.5. An integrated rack designed to operate in both the MPLM and any ISPR location must meet all requirements in Sections 3.2.6.1 through 3.2.6.5 and all Interface B requirements in Section 3.2.

3.2.6.1 MPLM ELECTRICAL POWER CHARACTERISTICS

The interface between an integrated rack (Refrigerator/Freezer Rack) and the MPLM electrical power system is shown in Figure 3.2.1–1, Electrical Power System Interface Locations. The integrated rack shall operate and be compatible with the Interface C electrical power characteristics in the following paragraphs:

A. Paragraph 3.2.1.1.2

B. Paragraph 3.2.1.2.1

C. Paragraph 3.2.1.2.2

D. Paragraph 3.2.1.3.2

E. Paragraph 3.2.1.3.3

F. Paragraph 3.2.1.3.4, A

G. Paragraph 3.2.1.3.4, B

H. Deleted

I. Deleted

3.2.6.2 MPLM ELECTRICAL POWER INTERFACE

Integrated rack shall meet the Interface C electrical power interface requirements in the following paragraphs:

A. Paragraph 3.2.2.6.1.1, B

B. Paragraph 3.2.2.6.1.1, D

C. Paragraph 3.2.2.7.2

D. Paragraph 3.2.2.8

E. Paragraph 3.2.2.9

F. Paragraph 3.2.2.10

3.2.6.2.1 MPLM UIP CONNECTORS AND PIN ASSIGNMENTS

A. Integrated rack connectors P1 mating requirements to the UIP connectors J1 are specified in paragraph 3.1.1.6.1, A.

B. Integrated rack connectors P1 shall meet the pin out interfaces of the UIP connectors J1 as specified in SSP 57001, paragraph 3.2.1.1.

C. Integrated rack connectors P1 shall meet the requirements of SSQ 21635 or equivalent.

3.2.6.2.2 COMPATIBILITY WITH RPC SOFT START/STOP IN MPLM

An integrated rack connected to Interface C in MPLM shall be compatible with the MPLM RPC soft start/stop performance characteristics defined in Figure 3.2.6.2.2–1 when power is applied, sustained, and removed by control of remote power control switches.

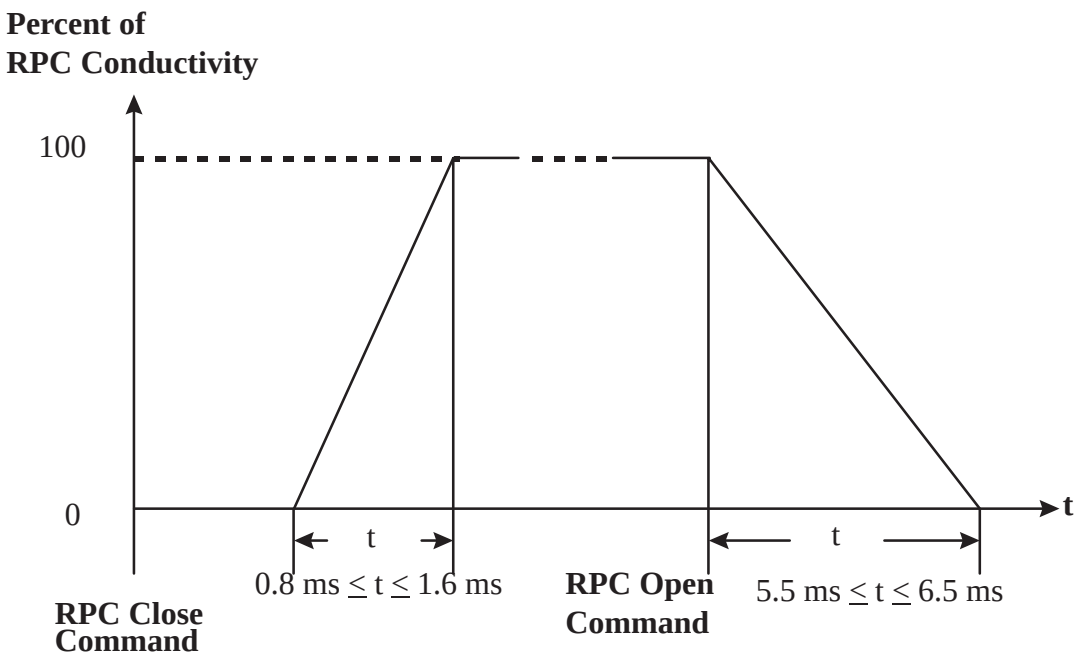

FIGURE 3.2.6.2.2–1 MPLM RPC SOFT START/STOP CHARACTERISTICS

3.2.6.2.3 MPLM SURGE CURRENT

When an integrated rack is powered from a voltage source with Interface C characteristics specified in paragraphs 3.2.1, with the exception that the source impedance is considered to be 0.1 ohm, the surge current requirements for all operating modes and changes including power-up and power-down are defined as follows:

A. The surge current for an integrated rack at the high power location shall not exceed 9.8 A.

B. The surge current for an integrated rack at the low power location shall not exceed 5.3 A.

C. The maximum current rate of change shall not exceed the values defined in Figure 3.2.2.4–2.

D. The duration of the surge current shall not exceed 9 milliseconds.

3.2.6.2.4 MPLM REVERSE ENERGY/CURRENT

The maximum reverse current from the integrated rack to MPLM EPS shall not exceed 0.9 Amps for the MPLM environmental conditions specified in Table 3.9.4–1 when powered from a voltage source with characteristics specified in paragraphs 3.2.6.1 with a source impedance of 0.1 ohm.

3.2.6.2.5 MPLM PAYLOAD TRIP RATINGS

The payload power circuit protection device in the integrated rack connected to either the high power location, or the low power location in MPLM, shall be designed to provide trip coordination, i.e., the downstream circuit protection device disconnects a shorter circuit or an overloaded circuit from the upstream power interface without tripping the upstream circuit protection device. The trip coordination is achieved either by shorter trip time or lower current limitation than the upstream protection devices defined in Paragraph 3.2.2.6.1.1.B.

3.2.6.3 MPLM ELECTRICAL POWER CONSUMER CONSTRAINTS

Integrated rack shall meet the electrical power consumer constraints in the following paragraphs:

A. Paragraph 3.2.3.1.B

B. Paragraph 3.2.3.1.C

C. Paragraph 3.2.3.2.A

D. Paragraph 3.2.3.3

3.2.6.4 MPLM ELECTROMAGNETIC COMPATIBILITY

Integrated rack shall meet the electromagnetic compatibility requirements in the following paragraphs:

A. Paragraph 3.2.4.1, Electrical Grounding

B. Paragraph 3.2.4.2, Electrical Bonding

C. Paragraph 3.2.4.3, Cable/Wire Design and Control Requirements

D. Paragraph 3.2.4.4, Electromagnetic Interference

E. Paragraph 3.2.4.5, Electrostatic Discharge

F. Paragraph 3.2.4.6, Alternating Current (ac) Magnetic Fields

G. Paragraph 3.2.4.7, Direct Current (dc) Magnetic Fields

H. Paragraph 3.2.4.8, Corona

I. Paragraph 3.2.4.9, Lightning

J. Paragraph 3.2.4.10, EMI Susceptibility for Safety-Critical Circuits

3.2.6.4.1 MPLM BONDING

Integrated rack shall incorporate structural/mechanical provisions class R bonding to the MPLM in accordance with SSP 30245, Space Station Electrical Bonding Requirements.

3.2.6.5 MPLM SAFETY REQUIREMENTS

The integrated rack shall meet the safety requirements in the following paragraphs:

A. Paragraph 3.2.5.1.1

B. Paragraph 3.2.5.1.2

C. Paragraph 3.2.5.2

D. Paragraph 3.2.5.3

E. Paragraph 3.2.5.4

F. Paragraph 3.2.5.5

3.3 COMMAND AND DATA HANDLING INTERFACE REQUIREMENTS

3.3.1 GENERAL REQUIREMENTS

Note: The referenced callouts in this document that include SSP 57002, are to be used until the new document SSP 57002 is baselined. SSP 57002 has not been titled or outlined at the time of baselining this document, therefore the references are open ended. SSP 57002 subject is a Payload Software ICD blank book. Further work is being done to resolve multiple layer references. At the time of baselining this document the multiple flowdowns do apply, and the following shall will remain.

Applicable paragraphs called out in the applicable documents in this section shall be considered a part of this sections' requirements.

3.3.2 WORD/BYTE NOTATIONS, TYPES AND DATA TRANSMISSIONS

This section applies to all payload commands and data on the Low Rate Data Link (LRDL), all header/trailer data on the Medium Rate Data Link (MRDL) and High Rate Data Link (HRDL) stated in section 3.3 of this document.

3.3.2.1 WORD/BYTE NOTATIONS

The integrated racks shall use the word/byte notations as specified in paragraph 3.1.1, Notations in SSP 52050.

3.3.2.2 DATA TYPES

The integrated racks shall use the data types as specified in paragraph 3.2.1 and subsections, Data Formats in SSP 52050.

3.3.2.3 DATA TRANSMISSIONS

A. The integrated rack data transmission on Low Rate Data Link (LRDL), MIL–STD–1553B shall use the data transmission order in accordance with paragraph 3.4, Non-Signal Data Coding Standards in D684–10056–01, Prime Contractor Software Standards and Procedures Specification.

B. The integrated rack data transmission on Medium Rate Data Link (MRDL) shall use the data transmission order in accordance with paragraph 3.3.3.1, Transmission Order in SSP 52050.

C. The integrated rack data transmission on High Rate Data Link (HRDL) shall use the data transmission order in accordance with paragraph 1.6, Bit Numbering Convention and Nomenclature in CCSDS 701.0–B–2.

3.3.3 DELETED

3.3.4 CONSULTATIVE COMMITTEE FOR SPACE DATA SYSTEMS

Integrated racks will use the Consultative Committee for Space Data Systems (CCSDS) standards for Space to Ground and Ground to Space data and time requirements as specified in this section.

3.3.4.1 CCSDS DATA

A. Integrated rack data that is space to ground shall be either CCSDS Data Packets or CCSDS Bitstream.

B. Integrated rack data that is ground to space shall be CCSDS Data Packets.

C. Integrated rack to Payload MDM data shall be CCSDS Data Packets.

3.3.4.1.1 CCSDS DATA PACKETS

Integrated rack data packets shall be developed in accordance with paragraph 3.1.3 of SSP 52050. Integrated racks CCSDS data packets consist of a primary header and a secondary header followed by the data field.

3.3.4.2.1.1 CCSDS PRIMARY HEADER

Integrated racks shall develop a CCSDS primary header in accordance with paragraph 3.1.3.1 CCSDS Primary Header Format of SSP 52050.

3.3.4.2.1.2 CCSDS SECONDARY HEADER

A. Integrated racks shall develop a CCSDS secondary header immediately following the CCSDS primary header.

B. The CCSDS secondary header shall be developed in accordance with paragraph 3.1.3.2, CCSDS Secondary Header Format of SSP 52050.

3.3.4.2.2 CCSDS DATA FIELD

The integrated rack CCSDS data field shall contain the integrated rack data from the transmitting application to the receiving application, and the CCSDS checksum in accordance with paragraph 3.1 and subparagraphs, Data Formats and Standards, of SSP 52050.

3.3.4.2.3 CCSDS DATA BITSTREAM

Integrated rack bitstream data shall be developed in accordance with paragraph 2.3.2.3, Bitstream Service of CCSDS 701.0–B–2.

3.3.4.2.4 CCSDS APPLICATION PROCESS IDENTIFICATION FIELD

The CCSDS Application Process Identification (APID) will be used for routing data packets as described in paragraph 3.3.2.1.3, APID Routing, of SSP 41175–2. The format of APIDs is shown in Table 3.3.2.1.1–1, CCSDS Primary Header Field Definitions, of SSP 41175–2.

Telemetry APIDs for a payload or subrack payload will be assigned by the Payload Engineering and Integration function upon request from the payload or subrack payload developer or rack integrator, and will be recorded in the integrated rack unique software ICD.

3.3.4.3 CCSDS TIME CODES

3.3.4.3.1 CCSDS UNSEGMENTED TIME

Integrated racks shall use CCSDS unsegmented time code (CUC) in the secondary header as specified in paragraph 2.2, CCSDS Unsegmented Time Code (CUC), of CCSDS 301.0–B–2.

3.3.4.3.2 CCSDS SEGMENTED TIME

Segmented time code will be sent to the integrated rack by a broadcast message on the Payload MIL–STD–1553B. Segmented time code formats is specified in paragraph 2.4, CCSDS Calendar Segmented Time Code (CCS), of CCSDS 301.0–B–2.

The broadcast time will be received at subaddress #29 on each Payload MIL–STD–1553B bus. The broadcast time signal will be updated once a second and is accurate to ±2.5 ms with respect to the Space Station Global Positioning System (GPS) receiver.

3.3.5 MIL-STD-1553B LOW RATE DATA LINK (LRDL)

Each integrated rack shall implement a single MIL–STD–1553B Remote Terminal (RT) to the payload unique MIL–STD–1553B bus in accordance with paragraph 3.2, MIL–STD–1553B Interface, of SSP 52050.

3.3.5.1 MIL-STD-1553B PROTOCOL

3.3.5.1.1 STANDARD MESSAGES

Integrated racks shall develop standard message for the Payload MIL–STD–1553B in accordance with paragraph 3.2.3.3, Standard Messages of SSP 52050.

3.3.5.1.2 COMMANDING

Integrated racks shall receive and process commands from the Payload MDM that originate from the Ground, Timeliner, Payload MDM and Portable Computer System (PCS) in accordance with paragraph 3.2.3.4, Commanding, of SSP 52050.

3.3.5.1.3 HEALTH AND STATUS DATA

Integrated racks shall develop health and status data in accordance with paragraph 3.2.3.5, Health and Status, of SSP 52050. The health and status data shall be documented in accordance with the data field format defined in Table A–5, Health and Status ISS Processed Data Packets,

of SSP 57002. The definition of health and status data is provided in the Glossary of Terms, Appendix B of this document.

Integrated racks shall respond to their respective payload MDM polls for health and status data with updated data at a 1 Hz or 0.1 Hz rate.

3.3.5.1.4 SAFETY DATA

A. Safety data is the set of payload generated C&W related parameters that are required to be available in the CCS MDM for S–band downlink, display to the crew on a core PCS, or monitored for C&W events, Determination of the safety–related parameters that are required is the responsibility of the PD/PI. An example of safety–related data is a current or temperature sensor parameter which is being monitored for a situation that could lead to fire or overheating. Safety data shall be included in the H&S data CCSDS packets provided by ISPR RTs.

B. Integrated racks shall provide as safety data the standard rack caution and warning status words in accordance with paragraph 3.2.3.5, Health and Status Data, of SSP 52050.

3.3.5.1.4.1 CAUTION AND WARNING

For the purpose of C&W classifications, the sensors are the integrated racks means of detecting events that were deemed necessary by the PSRP during the Phased Safety Reviews. The sensors used to produce Caution and Warning Events are determined by the payload developer, advisories may be set if the payload developer identifies a situation that meets the classification of an advisory.

3.3.5.1.4.1.1 CLASS 1 – EMERGENCY

All of the defined ISS Emergency conditions are reported by the ISS systems or the rack smoke detector, integrated racks and equipment will not report an Emergency condition.

(1) The emergency condition rapid cabin depressurization will be detected by the ISS module sensors.

(2) The emergency condition of toxic atmosphere is set as a scar.

(3) Payload Fire emergency’s can only be declared as a confirmed fire event by the ISS rack smoke detector or equivalent, which can detect 96% of the smoke detector failures.

When an emergency event is detected, the format of the data will identify the event type (fire, toxic atmosphere, depressurization)

Emergency conditions require all onboard crew to respond immediately.

3.3.5.1.4.1.2 CLASS 2 – WARNING

Integrated racks shall format the caution and warning word in accordance with paragraph 3.2.3.5, Health and Status Data, of SSP 52050 as a warning when the integrated rack sensors detect the following conditions:

(1) A potential fire event, (detected by a sensor other than an ISS rack smoke detector or equivalent)

(2) A precursor event that could manifest to an emergency condition (toxic atmosphere, rapid cabin depressurization or fire) and

  (a) automatic safing has failed to safe the event or

  (b) the system is not automatically safed (i.e. requires manual intervention)

(3) An event that results in the loss of a hazard control and

  (a) automatic safing has failed to safe the event or

  (b) the system is not automatically safed (i.e. requires manual intervention)

Note: A Warning requires someone to take action immediately. Warnings are used for events that require manual intervention and for notification when automatic safing fails.

3.3.5.1.4.1.3 CLASS 3 – CAUTION

Integrated racks shall format the caution and warning word in accordance with paragraph 3.2.3.5, Health and Status Data, of SSP 52050 as a caution when the integrated rack sensors detect the following conditions:

(1) A precursor event that could manifest to an emergency condition (toxic atmosphere, rapid cabin depressurization or fire) and automatic safing has safed the event (i.e. the system does not require manual intervention)

(2) An event that results in the loss of a hazard control and automatic safing has safed the event (i.e., the system does not require manual intervention)

Note: A Caution requires no immediate action by the crew. Automatic safing has controlled the event.

3.3.5.1.4.1.4 CLASS 4 – ADVISORY

Integrated racks that require an advisory shall format the caution and warning word in accordance with paragraph 3.2.3.5, Health and Status Data, of SSP 52050 as an advisory. Advisories are set for the following conditions:

(1) Advisories are set primarily for ground monitoring purposes (advantageous due to limited comm. coverage and data recording).

(2) Data item that most likely will not exist permanently in Telemetry List but should be time tagged and logged for failure isolation, trending, sustaining engineering, etc.

3.3.5.1.5 SERVICE REQUESTS

Integrated racks shall develop service requests shall be in accordance with paragraph 3.2.3.7, Service Requests of SSP 52050. The service requests data format, shall be developed in accordance with Table 3.2.3.7–1, Service Requests, of SSP 52050.

3.3.5.1.6 ANCILLARY DATA

Information regarding ancillary data that can be made available to payloads is contained in paragraph 3.2.3.8, Ancillary Data, of SSP 52050.

3.3.5.1.7 FILE TRANSFER

Integrated racks requiring file transfer shall develop its file transfer in accordance with paragraph 3.2.3.9, File Transfer, of SSP 52050.

3.3.5.1.8 LOW RATE TELEMETRY

Integrated racks requiring low rate telemetry shall develop low rate telemetry (i.e. science data) in accordance with paragraph 3.2.3.10, Low Rate Telemetry of SSP 52050.

3.3.5.1.9 DEFINED MODE CODES

Integrated racks MIL–STD–1553B mode codes are defined in paragraph 3.2.3.2.1.5, Data Word Count/Mode Code in SSP 52050.

3.3.5.1.10 IMPLEMENTED MODE CODES

Integrated racks shall implement MIL–STD–1553B mode codes in accordance with paragraph 3.2.3.2.1.5, Data Word Count/Mode Code, and Table 3.2.3.2.1.5–1, Mode Codes of SSP 52050.

3.3.5.1.11 UNIMPLEMENTED/UNDEFINED MODE CODES

The integrated rack MIL–STD–1553B Remote Terminal (RT) may be designed to recognize both unimplemented and undefined mode codes as illegal commands. If the RT designer does decide to monitor for unimplemented/undefined code modes, the RT shall respond by setting the message error bit in the status word.

3.3.5.1.12 ILLEGAL COMMANDS

The integrated rack MIL–STD–1553B RTs are not required to respond to illegal commands. If a RT desgined with this option detects an illegal command, it shall respond to the illegal command by setting the message error bit in the status word.

3.3.5.2 MIL-STD-1553B LOW RATE DATA LINK (LRDL) INTERFACE CHARACTERISTICS

3.3.5.2.1 LRDL REMOTE TERMINAL ASSIGNMENT

3.3.5.2.1.1 LRDL CONNECTOR/PIN ASSIGNMENTS

3.3.5.2.1.2 MIL–STD–1553B BUS A AND B CONNECTOR/PIN ASSIGNMENT

A. Integrated rack connectors P3 and P4 mating requirements to the UIP connector J3 and J4 are specified in Table 3.1.1.6.1–1, Module Connectors, items C and D.

B. Integrated rack connectors P3 and P4 shall meet the pin out interfaces of the UIP J3 and J4 connectors respectively as specified in paragraph 3.3.2.2, Connectors, of SSP 57001.

C. Integrated rack connectors P3 and P4 shall meet the requirements of SSQ 21635 or equivalent.

3.3.5.2.1.3 DELETED

A. Deleted

B. Deleted

C. Deleted

3.3.5.2.1.4 REMOTE TERMINAL HARDWIRED ADDRESS CODING

A. The integrated rack shall be designed to read and respond to the hardware remote terminal address coding scheme for the Standard Payload Bus, for all ISPR locations defined in Table 3.3.5.2.1.4–1. Details of the implementation of the payload remote terminals are illustrated in Figure 3.3.5.2.1.4–1.

B. Decimal values shall be mapped in 5 bit presentation, bit 0 = Least Significant Bit (LSB), see Figure 3.3.5.2.1.4–1.

C. Odd–parity shall be used.

D. Jumpering address line to ground shall be logic 0.

E. Pull up devices, shown in Figure 3.3.5.2.1.4–1, shall be in accordance with MIL–STD–1553B.

TABLE 3.3.5.2.1.4–1 REMOTE TERMINAL HARDWIRED ADDRESS CODING FOR STANDARD PAYLOAD BUS

APM ISPR		JEM ISPR		USL ISPR		CAM ISPR	
Location	RT Hardwired Address	Location	RT Hardwired Address	Location	RT Hardwired Address	Location	RT Hardwired Address
APM1F1	15	JPM1F1	15	LAB101	8	CAM1F2 (TBC)	20
APM1F2	16	JPM1F2	16	LAB102	9	CAM1F3 (TBC)	21
APM1F3	17	JPM1F3	17	LAB103	10	CAM1A2 (TBC)	20
APM1F4	18	JPM1F5	18	LAB104	11	CAM1A3 (TBC)	21
APM1A1	19	JPM1F6	19	LAB105	12	CAM1A3 (TBC)	**(TBD #9)**
APM1A2	20	JPM1A1	20	LAB1S1	8		
APM1A3	21	JPM1A2	21	LAB1S2	9		
APM1A4	22	JPM1A3	22	LAB1S3	10		
APM101	23	JPM1A4	23	LAB1S4	11		
APM102	24	JPM1A5	24	LAB1D3	14		
				LAB1P1	12		
				LAB1P2	15		
				LAB1P4	17		

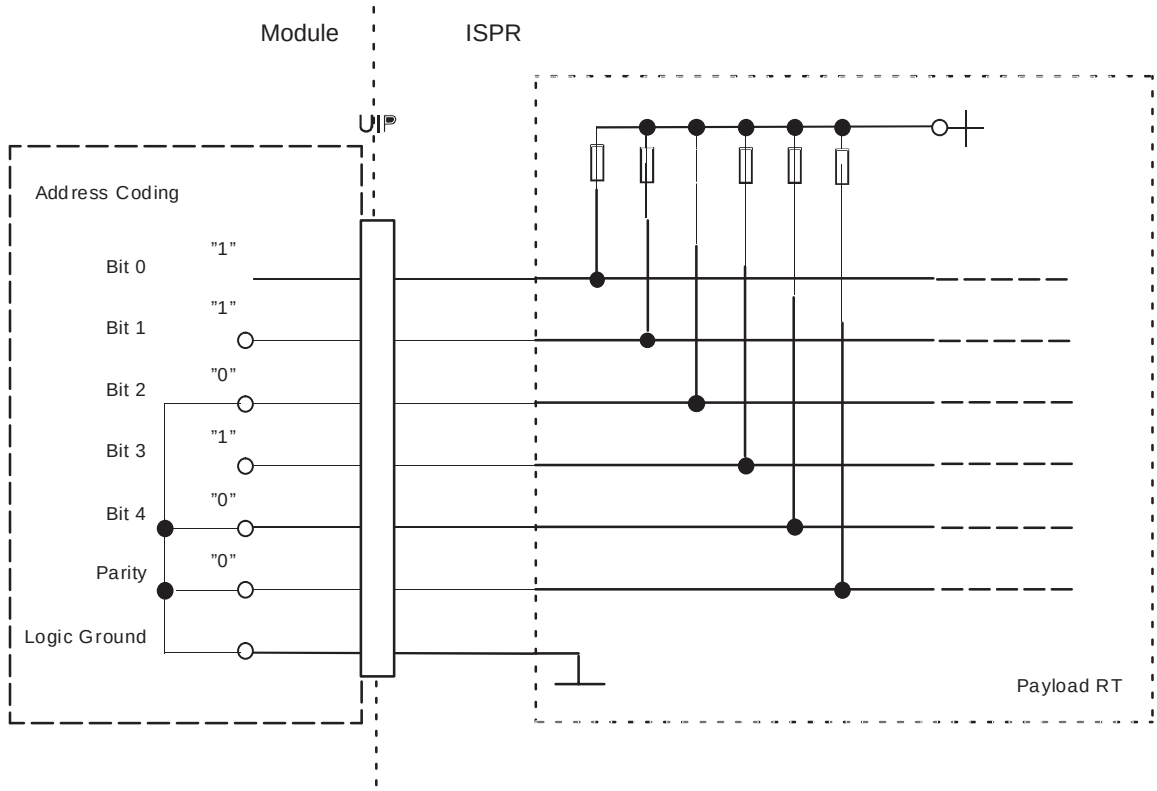

Note: Example RT Address = 11 in decimal representation.
All address and parity lines have pull up resistors so that "0" on those lines is achieved by connecting the lines to common secondary return. The parity is odd. Bit 0 is LSB.

FIGURE 3.3.5.2.1.4–1 REMOTE TERMINAL HARDWIRED ADDRESS CODING (EXAMPLE)

3.3.5.2.2 LRDL SIGNAL CHARACTERISTICS

Integrated racks which require connectivity to the payload local MIL-STD-1553B bus shall meet the electrical characteristics in accordance with MIL-STD-1553B.

The integrated rack MIL–STD–1553B terminal characteristics shall be in accordance with paragraph 4.5.2, Terminal Characteristics of MIL–STD–1553B.

3.3.5.2.3 LRDL CABLING

The integrated rack MIL–STD–1553B internal wiring characteristics shall be according to SSQ 21655, Cable, Electrical, MIL–STD–1553B Data Bus, Space Quality, General Specification for 75 Ohm or equivalent.

The integrated rack MIL–STD–1553B internal wiring characteristics are summarized in Table 3.3.5.2.3–1, MIL–STD–1553B Cable Characteristic.

TABLE 3.3.5.2.3–1 MIL–STD–1553B NETWORK CHARACTERISTICS

Characteristic	Parameter
Type	Twisted Shielded Pair SSQ 21655 or Equivalent
Characteristic Impedance	75 ± 5 Ohm
Cable Size	22 AWG or 24 AWG
Nominal wire-to-wire Capacitance	66 pf/m

The integrated rack MIL–STD–1553B internal wiring stub length shall not exceed 12 feet, 3.65 meters, when measured from the internal MIL–STD–1553B Remote Terminal to the ISPR Utility Interface Panel.

3.3.5.2.4 MULTI–BUS ISOLATION

For Payloads utilizing multiple ISS Payload MIL–STD–1553B data buses, the signal isolation between the buses shall be no less than 58 dB. A data bus consists of a redundant pair, channel A and channel B. It matters not that the data buses exit the payload on the same or different connectors, nor that the data buses are connected to the same or different buses. This requirement does not apply to payload unique buses.

3.3.6 MEDIUM RATE DATA LINK (MRDL)

3.3.6.1 MRDL PROTOCOL

Integrated racks that communicate via the MRDL shall conform with ISO/IEC 8802–3 10–Base-T protocol in accordance with paragraph 3.3, Medium Rate Data Link of SSP 52050.

3.3.6.1.1 INTEGRATED RACK PROTOCOLS ON THE MRDL

Integrated racks that communicate via the MRDL shall conform with ISO/IEC 8802–3 10–Base-T protocol in accordance with paragraph 3.3, Medium Rate Data Link (MRDL) of SSP 52050.

Payloads sending data to the ground through the USOS Space to Ground Link shall use the CCSDS protocol and gateway protocol in paragraph 3.3.4, Gateway Protocol and 3.3.7 Packet Length in SSP 52050.

3.3.6.1.2 MRDL ADDRESS

Integrated racks implementing MRDL shall have a unique IEEE issued physical address.

Payloads that are internal to the integrated rack shall have a unique IEEE issued physical address.

The unique address shall be set prior to the Ethernet terminal going active. The integrated rack will indicate the unique physical address in the payload unique ICD.

Recommendation to the integrated rack developer is to hard code the unique address.

3.3.6.1.3 ISPR MRDL CONNECTIVITY

ISPR MRDL connectivity information may be found in section 3.3, Medium Rate Data Link, of SSP 52050.

A. Each integrated rack with a MRDL connection shall have no more than one physical connection per LAN. An integrated rack with a MRDL connection may have one physical connection to LAN–1 and one physical connection to LAN–2. LAN–1 is located in J46 and LAN–2 is located in J47.

B. Integrated racks shall not route or transmit the same MRDL message to the ISS LANs simultaneously.

C. Integrated racks with internal MRDL(s) shall provide isolation between the ISS MRDL LANs and the internal LANs with either an Ethernet Bridge or an Internet Protocol router that connects the LAN–1 and LAN–2 to the internal rack LAN(s).

D. Ethernet device connected to the ISS LAN shall have a (unique) IEEE issued address.

3.3.6.1.4 MRDL CONNECTOR/PIN ASSIGNMENTS AND WIRE REQUIREMENTS

A. Integrated rack connectors P46 and P47 mating requirements to the UIP connectors J46 and J47 are specified in paragraph 3.1.1.6.1, I and J.

B. Integrated rack connectors P46 and P47 shall meet the pin out interfaces of the UIP J46 and J47 connectors as specified in SSP 57001, paragraph 3.3.3.1.

C. Integrated rack LAN–1 and LAN–2 connectors P46 and P47 shall meet the requirements of SSQ 21635 or equivalent.

D. Integrated rack LAN–1 and LAN–2 wire shall meet the requirements of 100 Ohm twisted-pair per SSQ 21655 or equivalent. The 100 Ohm twisted shielded pair cable defined in SSQ 21655 must be used due to its characteristics at MRDL data transmission frequencies.

3.3.6.1.4.1 DELETED

3.3.6.1.4.2 DELETED

3.3.6.1.5 MRDL SIGNAL CHARACTERISTICS

Payloads which require connectivity to the MRDL shall meet the electrical characteristics of MRDL in accordance with ISO/IEC 8802–3 with the following exceptions:

IEC Publication	60	High-Voltage Test Techniques
IEC Publication	380	Safety of Electrically Energized Office Machines
IEC Publication	435	Safety of Data Processing Equipment
IEC Publication	950	Safety of Information Technology Equipment, Including Electrical Business Equipment

3.3.6.1.6 MRDL CABLE CHARACTERISTICS

The cable characteristics are given in Table 3.3.6.1.6–1.

TABLE 3.3.6.1.6–1 LINK SEGMENT CABLE CHARACTERISTICS

Characteristic	Parameter
Characteristic Impedance	100 ±7 Ohm
Cable Size	22 AWG
Type of Cable	Twisted Shielded Pair SSQ 21655 or Equivalent
Nominal wire-to-wire Capacitance	45 pF/m
Max Cable Length in ISPR	5 m

3.3.6.1.6.1 INSERTION LOSS

The ISPR insertion losses will meet the requirements specified in paragraph 14.4.2.1 of ISO/IEC 8802–3 with the exception that the wire meets Table 3.3.6.1.6–1.

3.3.6.1.6.2 DIFFERENTIAL CHARACTERISTIC IMPEDANCE

The ISPR Differential Characteristic Impedance shall meet the requirements specified in section 14.4.2.2 of ISO/IEC 8802–3 with the exception that the wire meets Table 3.3.6.1.6–1.

3.3.6.1.6.3 MEDIUM TIMING JITTER

The ISPR Medium Timing Jitter will meet the requirements specified in paragraph 14.4.2.3 of ISO/IEC 8802–3 with the exception that the wire meets Table 3.3.6.1.6–1.

3.3.7 HIGH RATE DATA LINK (HRDL)

3.3.7.1 PAYLOAD TO HIGH RATE FRAME MULTIPLEXER (HRFM) PROTOCOLS

The integrated rack shall use the HRFM common protocols in accordance with paragraph 3.3.2, HRFM Protocols of SSP 50184.

3.3.7.2 HRDL INTERFACE CHARACTERISTICS

3.3.7.2.1 PHYSICAL SIGNALING

Physical signaling of the HRDL will be in accordance with section 3.0, Performance Requirements of SSP 50184.

3.3.7.2.1.1 PHYSICAL SIGNALING DATE RATES

A. The integrated rack shall be designed to transmit data on the HRDL with adjustable data rates in between 0.5 Mbps to 95 Mbps.

B. The integrated rack HRDL data rate shall be adjustable in increments of 0.5 Mbps.

C. Transmitted data shall be designed to be ”evenly parsed” in accordance with paragraph 3.3.1.3.2, Evenly Parsed Data of SSP 50184.

Note: 1) The HRDL is a shared resource on the International Space Station. The HRDL data is sent to the ground through the HRFM. When a payload has the entire HRFM capacity assigned to that payload, the Maximum HRDL Data Rate is approximately 43 Mbps. Under normal conditions the Payload shares the 43 Mbps with 11 other data sources. The actual HRDL data rate designed into the Payload is subject to planning.

2) The integrated racks maximum designed data rate is subject to planning.

3) The integrated racks are not required to implement every possible increment in the negotiated range. For example, an integrated rack may choose to implement 0.5, 1.0, 2.0, 4.0, 8.0, and 16.0 Mbps for a planned range of 0.5 to 16.0 Mbps.

4) The data rate tolerance is under investigation.

5) The payload may use any HRDL data rate desired in a multi–location payload where the source payload and the destination payload for the HRDL data is developed by one payload project.

3.3.7.2.2 ENCODING

Integrated racks using the HRDL shall encode the data in accordance with paragraph 3.1.3, Encoding, including both 3.1.3.1, Data and Symbol Encoding and Table 3.1.3.1–1, 4B/5B NRZI Encoding, and 3.1.3.2 Special Symbol Encoding of SSP 50184.

3.3.7.2.3 SYMBOLS USED IN TESTING

Integrated racks using the HRDL shall provide the Halt symbol (H) in accordance with Table 3.1.3.1–1, 4B/5B NRZI Encoding in SSP 50184 for use in optical power tests.

3.3.7.3 INTEGRATED RACK HRDL OPTICAL POWER

3.3.7.3.1 INTEGRATED RACK HRDL TRANSMITTED OPTICAL POWER

The integrated rack that transmits data on the HRDL, with or without an ARIS adapter, shall be designed to transmit a HRDL signal in accordance with paragraph 3.1.1, Transmitter Optical Characteristics of SSP 50184 at an average optical power greater than –16.75 dBm and less than –8.3 dBm.

The integrated rack transmitted optical power shall be measured at the integrated rack P7 connector to the ISPR connector interface panel using the Halt symbol.

3.3.7.3.2 INTEGRATED RACK HRDL RECEIVED OPTICAL POWER

The integrated rack that receives data on the HRDL, with or without an ARIS adapter, shall be designed to receive a HRDL signal in accordance with paragraph 3.1.2, Transmitter Optical Characteristics of SSP 50184 at an average optical power greater than –30.45 dBm and less than –8.5 dBm.

The integrated rack received optical power shall be measured at the integrated rack P7 connector to the ISPR connector interface panel using the Halt symbol.

3.3.7.4 HRDL FIBER OPTIC CABLE

The integrated rack shall use fiber optic cable in accordance with SSQ 21654.

3.3.7.5 HRDL FIBER OPTIC CABLE BEND RADIUS

The integrated rack shall develop the routing, installation and handling procedures to assure the minimum bend radius of 2 inches or greater is maintained at all times for the Fiber Optic Cable.

3.3.7.6 HRDL CONNECTORS AND FIBER

A. Integrated rack connector P7 mating requirement to the UIP connector J7 is specified in paragraph 3.1.1.6.1, E.

B. Integrated rack connector P7 shall meet the pin out interfaces of the UIP J7 connector as specified in SSP 57001, paragraph 3.3.4.1.

C. Integrated rack HRDL connector P7 shall meet the requirements of SSQ 21635 or equivalent.

D. Integrated rack HRDL fiber shall meet the requirements of SSQ 21654 or equivalent.

3.3.7.7 DELETED

3.3.8 PERSONAL COMPUTERS

There are three types of personal computers available for payload operations: the Payload Laptop, Portable Computer System (PCS), and the Station Support Computer (SSC).

3.3.8.1 PAYLOAD LAPTOP

The Payload Laptop is a rack unique laptop which is provided by the Payload Developer (PD). The primary purpose of the Payload Laptop is to provide rack and experiment control and display. Requirements for the Payload Laptop are detailed below.

A. Payload racks which require a laptop shall utilize an IBM 760XD (model 9546U9E) laptop per JSC 27337, Project Technical Requirements Specification for the PCS.

B. Payload Laptops shall utilize a Windows NT 4.0 software load supporting the following standard services (Computer Browser, Internet Info Server 4.0, TCP/IP Printing, NetBIOS Interface, Network Monitor & Tools, RPC Config, Server, Transaction Server, Workstation) with TCP/IP Protocol suite.

C. Payload Laptop displays shall be in accordance with SSP 50313, Display and Graphical Commonality Standard.

D. Each rack shall be limited to one Payload Laptop computer.

E. The Payload Laptop shall interface to the rack via a front panel connection utilizing the connectors as specified in Table 3.3.8.1–1 and pin outs per SSP 57001, Figures 3.3.6.1–1 through 3.3.6.1–4.

F. Data / power cables shall be per design specified in drawings shown in Figure 3.3.8.1–1.

G. A 28V power converter, shown in Figure 3.3.8.1–1, shall be per design specified in drawing SED39126010–305.

H. The Payload Laptop shall be attached to the rack seat track via the multi–use bracket, SEG33107631–301 and PGSC desk, Shuttle P/N SED33108703–302 or equivalent.

TABLE 3.3.8.1–1 RACK CONNECTOR PART NUMBERS

Power	MS3474L14–12S
RS–232	MS27468T15F35SA
Ethernet	MS27468T11F35S
Video	BJ76

Figure 3.3.8.1-1 Data / Power Cable Design

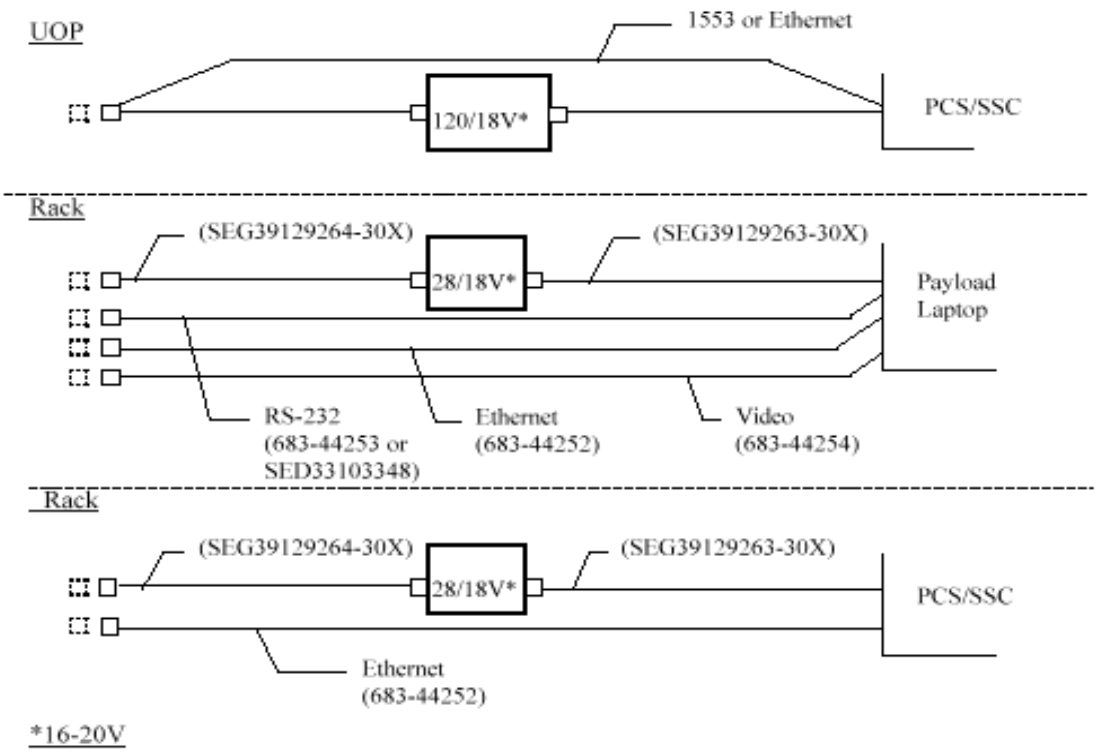

FIGURE 3.3.8.1–1 DATA/POWER CABLE DESIGN

3.3.8.2 PCS

The PCS is a complement level laptop which is a shared ISS resource. The purpose of the PCS is to provide 1553 connectivity to the C&C and Payload MDMs. PCS has the following displays available for use by the crew: vehicle displays, complement level payload displays, and if requested, payload unique displays. All of these run under the Solaris operating system. The IBM 760XD laptop hardware also provides Ethernet, RS–232 and RS–422 interfaces. The PCS is only connected to the payload 1553 bus for payload command and control. However, the PCS hardware and Solaris OS is available as a shared resource for direct connection to a payload rack. Ethernet, RS–422/232 user display and interface control software must be provided by the payload developers. All payload developed software for use on PCS must be delivered to the PSIV for integration into a payload complement load.

A. All payload software to be used on PCS shall adhere to the PCS Interface Definition Document (IDD), SSP 52052.

B. PCS displays shall be in accordance with SSP 50313, Display and Graphical Commonanilty Standard. (not unique to PCS)

C. Each integrated rack shall be limited to one shared PCS. The PCS is not dedicated to a rack; memory and hard drive availability for payload displays and software must be negotiated with the Payload Software Control Panel.

3.3.8.2.1 PCS TO UOP INTERFACE

A. The PCS interface to payloads is through the MIL–STD–1553B (PLMDM) port or SSMB (Ethernet) port of a UOP in accordance with paragraph 3.2.1.2 of SSP 57001.

B. A 120V power converter and data / power cables are utilized as shown in Figure 3.3.8.1–1.

3.3.8.2.2 760XD LAPTOP TO RACK INTERFACE

A. The integrated rack shall interface with the 760XD via a front panel connection utilizing the connectors as specified in Table 3.3.8.1–1 and pin outs per SSP 57001, Figures 3.3.6.1–1 through 3.3.6.1–4.

B. Data / power cables shall be per design specified in drawings shown in Figure 3.3.8.1–1.

C. A 28V power converter, shown in Figure 3.3.8.1–1, shall be per design specified in drawing SED39126010–305.

D. The 760XD shall be attached to the rack seat track via the multi–use bracket, SEG33107631–301 and PGSC desk, Shuttle P/N SED33108703–302.

3.3.8.3 SSC

The SSC shares the same hardware platform as the PCS (IBM 760), and is provided as a shared ISS resource. The primary purpose of the SSC is to provide crew support applications, including the Manual Procedures & Onboard Short Term Plan viewers, the Inventory Management System Database, Worldmap and other such tools. The SSC communicates via Ethernet as part of the ISS Ops LAN (IOL), and does not interface with any 1553 MDM systems. The SSC utilizes a Windows 95 O/S and follows Microsoft Windows display standards for GUI generation. The SSC connects to the UOP's for power only. RS 232, 422, or Ethernet connections exist to suppport direct connectivity to payload hardware.

A. Each integrated rack shall be limited to one shared SSC. The SSC is not dedicated to a rack; memory and hard drive availability for payload displays and software must be negotiated with the Payload Software Control Panel.

B. SSC displays shall be in accordance with SSP 50313, Display and Graphic Commonality Standard. (not unique to SSC).

3.3.9 UOP

UOP mating, pinout, and SSQ requirements are located in section 3.2.2.1.

3.3.10 MAINTENANCE SWITCH, SMOKE DETECTOR, SMOKE INDICATOR, AND INTEGRATED RACK FAN INTERFACES

3.3.10.1 RACK MAINTENANCE SWITCH (RACK POWER SWITCH) INTERFACES

A. The integrated rack power off command interface characteristics shall be in accordance with Table 3.3.10.1–1, Bi-Level Data Characteristics (Switch Contact).

B. The integrated payload rack power cut–off shall be implemented with a manually operated two–position, lever lock switch.

TABLE 3.3.10.1–1 BI-LEVEL DATA CHARACTERISTICS (SWITCH CONTACT)

PARAMETER	ENG. UNIT	ISPR
Type Transfer		Floating (Isolation resistance >1MΩ) dc coupled
I/F Resistance (closed)	Ω	< 20
I/F Resistance (open)	MΩ	> 1
Open Circuit Leakage Current	μA	0 to 100
Operating Current (closed)	mA	0.2 to 30
Minimum Open Circuit Voltage	V	20

3.3.10.2 SMOKE DETECTOR INTERFACES

The smoke detector interface consists of :

1 analog obscuration signal from integrated rack to the module

1 analog scatter signal from integrated rack ISPR to the module

1 discrete built in test command from module to integrated rack.

The analog data monitoring interface characteristics will be as described in paragraph 3.3.10.2.1, Analog Interface Characteristics.

The discrete built in test command interface characteristics will be as described in paragraph 3.3.10.2.2 Discrete Command Interface Characteristics.

The electrical power is supplied to the smoke detector from the rack internal power distribution.

3.3.10.2.1 ANALOG INTERFACE CHARACTERISTICS

The electrical characteristics (signal source) of the active driver interface shall be in accordance with Table 3.3.10.2.1–1, Electrical Characteristics Envelope of Analog Signals.

TABLE 3.3.10.2.1–1 ELECTRICAL CHARACTERISTICS ENVELOPE OF ANALOG SIGNALS

PARAMETER	ENG. UNIT	ANALOG SIGNALS
TYPE	N/A	Balanced
TRANSFER	N/A	DC Coupled
ANALOG VOLTAGE (line to line)	V	–5 to +5
RIPPLE AND NOISE	mV Peak (1)	± 20
CAPACITY (Maximum)	nF	N/A
IMPEDANCE	Ohm	≤ 1K
OVERVOLTAGE PROTECTION (Min)	V	± 15
FAULT VOLTAGE EMISSION (Max)	V	± 15
FAULT CURRENT LIMIT. (Maximum)	mA	± 10 (2)

Notes: (1) Measurement Bandwidth ≥ 50 MHz
(2) ISPR AAA= 30mA max

3.3.10.2.2 DISCRETE COMMAND BUILT-IN-TEST INTERFACE CHARACTERISTICS

The discrete command built-in-test (BIT) interface characteristics (signal source) shall be in accordance with Table 3.3.10.2.2–1, Electrical Characteristics of BIT Interface.

TABLE 3.3.10.2.2–1 ELECTRICAL CHARACTERISTICS OF THE BIT INTERFACE

PARAMETER	ENG. UNIT	SMOKE SENSOR
TYPE	N/A	Single-Ended
TRANSFER	N/A	DC Coupled
I/F VOLTAGE (TRUE) (line to line)	V	< 1.5
OPERATING CURRENT ON (TRUE) (Max)	mA	2
RIPPLE AND NOISE	mV Peak (1)	± 100
FAULT VOLTAGE EMISSION (Max)	V	± 5
FAULT CURRENT EMISSION (Max)	mA	5

Notes: (1) Measurement Bandwidth ≥ 50 MHz
(2) If interface is active (on or true)

3.3.10.2.3 SMOKE INDICATOR ELECTRICAL INTERFACES

The smoke indicator electrical interface characteristics shall be in accordance with Table 3.3.10.2.3–1, Smoke Indicator Interface Characteristics.

TABLE 3.3.10.2.3–1 SMOKE INDICATOR INTERFACE CHARACTERISTICS

PARAMETER	ENG. UNIT	SMOKE INDICATOR
TYPE	N/A	Floating
TRANSFER	N/A	DC Coupled
LOAD CURRENT (max)	mA	10
OVERVOLTAGE PROTECTION RANGE	V	±20
FAULT CURRENT EMISSION (max)	mA	24
IMPEDANCE (DC)	Ohm	>650

Note: At zero current rating (infinite load impedance)

3.3.10.2.4 FAN VENTILATION STATUS ELECTRICAL INTERFACES

The integrated rack fan ventilation status electrical interface characteristics shall be in accordance with paragraph 3.3.10.2.1, Analog Interface Characteristics.

The air is circulated through the smoke sensor in the integrated rack by a fan controlled and powered by the integrated rack.

3.3.10.3 RACK MAINTENANCE SWITCH (RACK POWER SWITCH)/FIRE DETECTION SUPPORT INTERFACE CONNECTOR

A. Integrated rack connector P43 mating requirements to the UIP connector J43 are specified in paragraph 3.1.1.6.1, G.

B. The integrated rack maintenance switch/FDS P43 connector shall meet the pin out interfaces of the UIP J43 connector as specified in SSP 57001, paragraph 3.3.6.

C. Integrated rack maintenance switch/FDS P43 connector shall meet the requirements of SSQ 21635 or equivalent.

3.4 PAYLOAD NTSC VIDEO AND AUDIO INTERFACE REQUIREMENTS

This paragraph is limited to internal video interfaces. The US LAB and APM provides a fiber optic video interface in accordance with paragraph 3.4.1.2, NTSC Fiber Optic Video. The JEM provides an NTSC electrical video interfacing accordance with paragraph 3.4.1.3, NTSC Electrical Video Interface. The MPLM does not have video.

3.4.1 PAYLOAD NTSC VIDEO INTERFACE REQUIREMENTS

3.4.1.1 PAYLOAD NTSC VIDEO CHARACTERISTICS

A. Payload NTSC video characteristics shall be in accordance with Table 3.4.1.1–1, NTSC Video Performance Characteristics.

B. The interpretation shall be in accordance with EIA/TIA RS–250–C End to End NTSC Video for Satellite Transmission System.

C. Video signal to crosstalk noise, shall be in accordance with paragraph 3.19 of NTC–7.

TABLE 3.4.1.1–1 NTSC VIDEO PERFORMANCE CHARACTERISTICS

Characteristic	End-to-End Path Characteristics	Test Method
Amplitude vs. Frequency	10 KHz to 300 KHz: ±0.2 dB at 3.58 Mhz ± 300 Khz :±0.4 dB to 4.2 Mhz: ±0.7 dB (A) to 10 Mhz: +1/–3 dB	EIA/TIA – 250C Para 6.1.1
Chrominance to Luminance Gain Inequality	± 4.0 IRE units	EIA/TIA – 250C Para 6.1.2.1
Chrominance to Luminance Delay Inequality	± 26 ns	EIA/TIA – 250C Para 6.1.2.2
Field Time Waveform Distortion	3 IRE units peak-to-peak	EIA/TIA – 250C Para 6.1.4
Line Time Waveform Distortion	1 IRE unit peak-to-peak	EIA/TIA – 250C Para 6.1.5
Short Time Waveform Distortion	2.0%	EIA/TIA – 250C Para 6.1.1
Long Time Waveform Distortion	8 IRE units overshoot Max. setting to 5 IRE units after 3 Sec.	EIA/TIA – 250C Para 6.1.7
Line-By-Line DC Offset	± 2.0 IRE Max.	
Insertion Gain and Variation	± 0.2 dB	EIA/TIA – 250C Para 6.1.8
Luminance Non-Linearity	6% Max	EIA/TIA – 250C Para 6.2.1
Differential Gain	4% Max	EIA/TIA – 250C Para 6.2.2.1
Differential Phase	1.9 degrees	EIA/TIA – 250C Para 6.2.2.2
Chrominance to Luminance Intermodulation	2.0 IRE	EIA/TIA – 250C Para 6.2.3
Chrominance Non-Linear Gain	2.0 IRE	EIA/TIA – 250C Para 6.2.4.1
Chrominance Non-Linear Phase	2.0 degrees	EIA/TIA – 250C Para 6.2.4.2
Dynamic Gain of the Picture Signal	4.0 IRE	EIA/TIA – 250C Para 6.2.5.1
Dynamic Gain of the Synchronizing Signal	2.0 IRE	EIA/TIA – 250C Para 6.2.5.2
Transient Synchronizing Signal Non-Linearity	3.0 IRE	EIA/TIA – 250C Para 6.2.6
Signal to Noise Ratio (10 KHz to 5 MHz) (Triangular)	43.8 dB min, unweighted	EIA/TIA – 250C Para 6.3.1
Signal to Noise Ratio (10 KHz to 10 MHz) (Triangular)	36.6 dB min, unweighted	EIA/TIA – 250C Para 6.3.1
Signal to Low Frequency Noise (0–10 kHz)	50 dB min, unweighted	EIA/TIA – 250C Para 6.3.2
Signal to Periodic Noise Ratio (300 Hz to 4.2 MHz)	63 dB min, unweighted	EIA/TIA – 250C Para 6.3.3
2T Short Time Distortion	± 4.0 IRE units	NTC–7 Para 3.5
Group Delay (5 to 10 MHz)	150 ns	

Note

(A) Monotonic roll off beyond 4.2 Min MHz.

3.4.1.2 NTSC FIBER OPTIC VIDEO

3.4.1.2.1 PULSE FREQUENCY MODULATION NTSC FIBER OPTIC VIDEO CHARACTERISTICS

The pulse frequency modulation (PFM) fiber optical video interface consists of one video channel into the rack, one video channel out of the rack, and one synchronization and control channel.

A. The PFM fiber optic vieo shall be in accordance with paragraph 3.4.1, Payload NTSC Video Characteristics.

B. The PFM fiber optic characteristics shall in accordance with Table 3.4.1.2–1, NTSC Fiber Optic Video Signal Characteristics.

TABLE 3.4.1.2–1 NTSC FIBER OPTIC VIDEO SIGNAL CHARACTERISTICS

PFM Signal Bandwidth	40–72 Megahertz (MHz)
PFM Signal Characteristics	Square wave, FM signal characterized by nominal 50 percent duty cycle
PFM Center Frequency (Blanking Level)	48.57 MHz (0 IRE/0mV)
White Level Frequency	70.25 Mhz (100 IRE/714 mV)
Sync Tip Frequency	40.07 Mhz (–40 IRE/–286 mV)
Blanking Level Variation	+/– 2 Mhz
Video Signal Format	NTSC composite NTSC/EIA–RSA–170A (1)
Pre-emphasis/De-emphasis	per CCIR Recommendation 405 of EIA/TIA–250–C. (1) (2)
Bus Media	Fiber Optics on both SSMB and APM sides
Video Sync	EIA–RS–170A Compliant Black Burst Sync

Notes:

(1) Or any video/data format compatible with PFM characteristics as indicated in this Table.

(2) With the emphasis enabled the above set-up results in PFM frequencies of 53.27 MHz for the white level (100 IRE/714 mV), 48.57 MHz for the blanking level (0 IRE/0mv), and 46.67 MHz for sync tip (–40 IRE/–286 mV).

3.4.1.2.2 INTEGRATED RACK NTSC PFM VIDEO TRANSMITTED OPTICAL POWER

The integrated rack that transmits PFM video on the optical video system, with or without an ARIS adapter, shall be designed to transmit a video PFM signal at an average optical power greater than –15.5 dBm.

3.4.1.2.3 INTEGRATED RACK NTSC PFM VIDEO AND SYNC SIGNAL RECEIVED OPTICAL POWER

The integrated rack that receives PFM video and sync signal on the optical video system, with or without an ARIS adapter, shall be designed to receive a PFM video and sync signal at an average optical power greater than –22.2 dBm.

3.4.1.2.4 FIBER OPTIC CABLE CHARACTERISTICS

The video/data and sync signals shall use fiber ptic cable in accordance with Table 3.4.1.2.4–1, PFM NTSC Video Optical Fiber Characteristics.

TABLE 3.4.1.2.4–1 PFM NTSC VIDEO OPTICAL FIBER CHARACTERISTICS

Parameter	Dim.	Medium Characteristics
Operating Wave length (min/max)	nm	1270/1380
Fibre Type	–	graded index, multimode
Fibre Core Diameter (min/max)	µm	98/102
Fibre Cladding Diameter (min/max)	µm	138/142
Numerical Aperture (min/max)	–	0.28/0.32
Attenuation @ 1290± 10nm	dB/Km	≤ 4
Modal Bandwidth @ 1290± 10nm	MHz × Km	200
–Signal Timing:		
Optical Rise Time (10% to 90%)	ns	≤ 3.5
Optical Fall Time (10% to 90%)	ns	≤ 3.5
Random Jitter (peak to peak) (1)	ns	≤ 0.76
Data Dependent Jitter (peak to peak) (1)	ns	≤ 0.6
Duty Cycle Distortion (peak to peak) (1)	ns	≤ 1

Note:
(1) These parameter refer to fibre optic data test setup.

3.4.1.2.5 PFM NTSC VIDEO FIBER OPTIC CABLE BEND RADIUS

The integrated rack shall develop the routing, installation and handling procedures to assure the minimum bend radius of 2 inches or greater is maintained at all times for the Fiber Optic Cable.

3.4.1.2.6 DELETED

3.4.1.2.7 PFM NTSC OPTICAL CONNECTOR/PIN ASSIGNMENTS

A. Integrated rack connector P16 mating requirements to the UIP connector J16 are specified in paragraph 3.1.1.6.1, F.

B. The integrated rack PFM NTSC video fiber optic system P16 connector shall meet the pin out interfaces of the UIP J16 connector as specified in SSP 57001, paragraph 3.4.1.2.

C. The integrated rack PFM NTSC video fiber optic system P16 connector shall meet the requirements of SSQ 21635 or equivalent.

3.4.1.3 NTSC ELECTRICAL VIDEO INTERFACES

3.4.1.3.1 NTSC ELECTRICAL VIDEO CHARACTERISTICS

(TBD #10)

3.4.1.3.2 DELETED

3.4.1.4 NTSC ELECTRICAL CONNECTOR/PIN ASSIGNMENTS

A. Integrated rack connector P77 mating requirements to the ISPR UIP connector J77 are specified in paragraph 3.1.1.6.1, K.

B. The integrated rack PFM NTSC video fiber optic system P77 connector shall meet the pin out interfaces of the UIP J77 connector as specified in SSP 57001, paragraph 3.4.2.1.

C. The integrated rack PFM NTSC video fiber optic system P77 connector shall meet the requirements of SSQ 21635 or equivalent.

3.4.2 U.S. ELEMENT AUDIO INTERFACE REQUIREMENTS

There are no direct audio interfaces from a payload to any ISS equipment. Audible Caution and Warning enunciation is through the Standard safety caution and warning status words.

3.5 THERMAL CONTROL INTERFACE REQUIREMENTS

3.5.1 INTERNAL THERMAL CONTROL SYSTEM (ITCS) INTERFACE REQUIREMENTS

3.5.1.1 PHYSICAL INTERFACE

A. Integrated rack connectors for moderate temperature water cooling supply and return mating requirements to the utility interface panel connectors are specified in paragraph 3.1.1.6.1, items L and M.

B. Integrated rack connectors for low temperature water cooling supply and return mating requirements to the utility interface panel connectors are specified in paragraph 3.1.1.6.1, items N and O.

3.5.1.2 ITCS FLUID USE AND CHARGING

A. ITCS Fluid Use

Coolant contained in the integrated rack that interfaces with ITCS coolant shall satisfy the cleanliness and materials requirements specified in paragraph 3.11.2.

B. Integrated Rack Charging

Payloads shall be delivered on-orbit charged with coolant as specified in paragraph 3.11.2 and during transport, integrated racks that are not actively serviced by the MPLM Thermal Control System during transport shall be charged to allow for thermal expansion between the temperature of 1.67° C (35° F) and 46° C (114.8° F).

3.5.1.3 ITCS PRESSURE DROP

A. Moderate Temperature Loop

The integrated rack shall be designed to meet the moderate temperature loop pressure drop specified in paragraph 3.5.1.2 of the Pressurized Payload Hardware Interface Control Document, SSP 57001 with both halves of each mated QD pair included as part of the payload pressure differential.

B. Low Temperature Loop

The integrated rack shall be designed to meet the low temperature loop pressure drop specified in paragraph 3.5.1.2 of the Pressurized Payload Hardware Interface Control Document, SSP

57001 with both halves of each mated QD pair included as part of the payload pressure differential.

3.5.1.4 COOLANT FLOW RATE

A. Moderate Temperature Loop

The integrated rack shall be designed to meet the moderate temperature loop allowable flow rate specified in paragraph 3.5.1.3 of the Pressurized Payload Hardware Interface Control Document, SSP 57001.

B. Low Temperature Loop

The integrated rack shall be designed to meet the low temperature loop allowable flow rate specified in paragraph 3.5.1.3 of the Pressurized Payload Hardware Interface Control Document, SSP 57001.

3.5.1.5 COOLANT SUPPLY TEMPERATURE

A. Moderate Temperature Loop

The integrated rack shall be designed to meet the moderate temperature loop coolant supply temperature specified in paragraph 3.5.1.4 of the Pressurized Payload Hardware Interface Control Document, SSP 57001.

B. Low Temperature Loop

The integrated rack shall be designed to meet the low temperature loop coolant supply temperature specified in paragraph 3.5.1.4 of the Pressurized Payload Hardware Interface Control Document, SSP 57001.

3.5.1.6 COOLANT RETURN TEMPERATURE

A. Integrated racks using moderate temperature coolant at operating modes above 1025 watts, shall have a minimum differential temperature across the integrated rack (inlet to outlet) of 19.5°C (35°F).

B. Integrated racks using moderate temperature coolant shall be designed to operate using 100 lbm/hr flow during operating modes which require less than 1025 watts of power.

C. The maximum moderate temperature coolant return temperature shall be no greater than 49°C (120°F).

D. The maximum low temperature coolant return temperature shall be no greater than 21°C (70°F).

3.5.1.7 COOLANT MAXIMUM DESIGN PRESSURE

A. Moderate Temperature Loop

The integrated rack shall withstand the moderate temperature loop maximum design pressure of 121 psia (834 kPa).

B. Low Temperature Loop

The integrated rack shall withstand the low temperature loop maximum design pressure of 121 psia (834 kPa).

C. MPLM Temperature Loop

Integrated racks requiring active cooling in the MPLM shall withstand the active thermal control loop maximum design pressure of 210 psia (1448 kPa). The maximum design pressure is derived from an Orbiter freon loop/Payload Heat Exchanger failure condition, the MPLM coolant will be a mixture of water and freon 21.

3.5.1.8 FAIL SAFE DESIGN

The integrated racks shall assess the payload equipment and rack internal water loop piping to ensure that it is fail safe in the case of loss of cooling under all modes of operation.

3.5.1.9 LEAKAGE

A. The integrated rack shall not exceed the maximum rack leakage rate of water of $14x10^{-3}$ scc/ hr (liquid) per each thermal loop at the MDP of 121 psia (834 kPa).

B. Integrated Refrigerator and Freezer racks that operate in the MPLM shall not exceed the maximum leakage rate of water of $9x10^{-3}$ scc/ hr (liquid) for 72 hours when exposed to 100% Freon–21 in the water lines at the MDP of 210 psia (1,448 kPa).

3.5.1.10 QUICK-DISCONNECT AIR INCLUSION

Payload Quick Disconnects shall not exceed the maximum air inclusion of .30 cubic centimeters (cc) maximum per mate or demate operation.

3.5.1.11 RACK FRONT SURFACE TEMPERATURE

The integrated rack shall be designed such that the average front surface temperature is less than 37° C (98.6° F) and partial limit not to exceed 49° C (120° F). **(TBR #1)**

3.5.1.12 CABIN AIR HEAT LEAK

The sensible heat leak to the cabin air from the integrated rack either alone or together with the other ISPR's simultaneously active will not exceed the limits specified in paragraph 3.5.1.9 of the Pressurized Payload Hardware Interface Control Document, SSP 57001. These limits represent the total cabin air heat load capability when the cabin temperature is at 18° C (65° F). The numbers in this Table are the total cabin heat load allocation for all the ISPR's on a module basis.

3.5.1.13 MPLM CABIN AIR COOLING

Absorption of heat from the cabin air by integrated racks operating in the MPLM shall be no greater than the maximum values listed in Table 3.5.1.13–1, with linear interpolation to ambient temperatures between the specified values.

TABLE 3.5.1.13–1 MPLM CABIN AIR HEAT ABSORPTION

Ambient Temperature	Rack–level Heat Absorption from MPLM Cabin Air (Watts)				MPLM Limit* (Watts)
	Crew Refrigerator/ Freezer Rack (R/FR)	MELFI Rack		CRYO SYSTEM Transportation Rack (Cryogenic Storage Freezer)	
		1 Dewar at –80° C (–112° F)	4 Dewars at –80° C (–112° F)		
60 °F (15.6 °C)	60 W				254 W
68 °F (20 °C)		24 W	68 W	16 W	
85 °F (29.4 °C)	77 W				317 W
120 °F (48.9 °C)	140 W	29 W	85 W	20 W	526 W

* This is maximum heat absorption by all refrigerated rack (R/FRs, MELFIs and Cryo Freezers) from the MPLM cabin air.

3.5.1.14 SIMULTANEOUS COOLING

A. Integrated racks requiring simultaneous moderate and low temperature flow shall be compatible with the thermal control system simultaneous flow interfaces specified in paragraph 3.5.1.6 of the Pressurized Payload Hardware Interface Control Document SSP 57001.

B. The moderate temperature loop and low temperature loop coolant flow shall not be mixed together.

3.5.1.15 CONTROL SYSTEM TIME CONSTANT

Integrated racks containing automated flow control systems shall be designed such that set point changes resulting in flow rate changes greater than five pounds mass flow per hour (5 lbm/hr) shall take at least 100 seconds to reach 63.2% (i.e., $1 - e^{-1}$) of the commanded change in flow rate.

3.5.1.16 PAYLOAD COOLANT QUANTITY

Integrated racks shall contain no more than the maximum allowable coolant quantity of water, referenced at 61° C (141.8° F), as specified in paragraph 3.5.1.7 of the Pressurized Payload Hardware Interface Control Document SSP 57001.

3.5.1.17 PAYLOAD GAS INCLUSION

The integrated rack shall not exceed the maximum allowable gas inclusion or volume at the maximum design pressure into the Internal Thermal Control System as specified in paragraph 3.5.1.8 of the Pressurized Payload Hardware Interface Control Document SSP 57001.

3.6 VACUUM SYSTEM REQUIREMENTS

3.6.1 VACUUM EXHAUST SYSTEM (VES)/WASTE GAS SYSTEM (WGS) REQUIREMENTS

3.6.1.1 VES/WGS PHYSICAL INTERFACE

Integrated rack connectors for the VES/WGS mating requirements to the UIP connectors are specified in paragraph 3.1.1.6.1, Q.

3.6.1.2 INPUT PRESSURE LIMIT

A. Integrated racks shall limit their vented exhaust gas to a pressure of 276 kPa (40 psia) or less at the rack to Station interface.

B. Integrated rack volumes connected to the VES/WGS shall be designed to a maximum design pressure of at least 276 kPa (40 psia) with safety factors in accordance with SSP 52005 paragraph 5.1.3.

C. The integrated rack shall be two failure tolerant to protect against failure conditions which would exceed VES/WGS max design pressure of 40 psia.

3.6.1.3 INPUT TEMPERATURE LIMIT

The initial temperature range of exhaust gases shall be between 16° C (60° F) to 45° C (113° F).

3.6.1.4 INPUT DEWPOINT LIMIT

The initial dewpoint of exhaust gases shall be limited to 16° C (60° F) or less.

3.6.1.5 ACCEPTABLE EXHAUST GASES

A. Integrated rack exhaust gases vented into the VES/WGS of the USL, APM, and JEM shall be compatible with the wetted surface materials of the respective laboratory(ies) in which the integrated rack will operate, as defined in SSP 41002, paragraph 3.3.7.2.

B. Integrated rack gases vented to the ISS VES/WGS shall be non–reactive with other vent gas mixture constituents.

C. Integrated racks venting to the ISS VES/WGS shall provide a means of removing gases that would adhere to the ISS VES/WGS tubing walls at a wall temperature or 4°C (40°F) and at a pressure of 10 (–3) torr. **(TBR #2)**

D. Integrated racks venting to the ISS VES/WGS shall remove particulates from vent gases that are larger than 100 micrometers in size. **(TBR #3)**

3.6.1.5.1 ACCEPTABLE GASES – LIST

A. A list of acceptable exhaust gases with verified compatibility to the USL VES wetted materials is specified in Appendix D1 and a list of unacceptable gases that are not compatible with the USL VES is specified in Appendix D2.

B. A list of acceptable exhaust gases with verified compatibility to the JEM WGS wetted materials is specified in Appendix D3 and a list of unacceptable gases that are not compatible with the JEM WGS is specified in Appendix D4.

C. A list of acceptable exhaust gases with verified compatibility to the APM WGS wetted materials is specified in Appendix D5 and a list of unacceptable gases that are not compatible with the APM WGS is specified in Appendix D6.

3.6.1.5.2 EXTERNAL CONTAMINATION CONTROL

Exhaust gases shall be compatible with paragraph 3.4 of SSP 30426, Space Station External Contamination Control Requirements, for molecular column density, particulates, and deposition on external Space Station surfaces.

3.6.1.5.3 INCOMPATIBLE GASES

A. The integrated rack shall provide containment, storage, and transport hardware for gases that are incompatible with the vacuum exhaust or external environment.

B. Containment hardware for incompatible exhaust gases shall meet the redundant container requirements specified in NSTS 1700.7, ISS Addendum, section 209.1b.

3.6.2 VACUUM RESOURCE SYSTEM (VRS)/VACUUM VENT SYSTEM (VVS) REQUIREMENTS

3.6.2.1 VRS/VVS PHYSICAL INTERFACE

Integrated rack connectors for the VRS/VVS mating requirements to the UIP connectors are specified in paragraph 3.1.1.6.1, R.

3.6.2.2 INPUT PRESSURE LIMIT

A. Integrated racks shall limit their vented VRS/VVS gases to a pressure of 10^{-3} torr or less at the rack to Station interface.

B. Integrated rack volumes connected to the VRS/VVS shall be designed to a maximum design pressure of at least 276 kPa (40 psia) with safety factors in accordance with SSP 52005 paragraph 5.1.3.

3.6.2.3 VRS/VVS THROUGH-PUT LIMIT

Integrated racks shall limit their gas throughput to the VRS/VVS to less than 1.2 x 10^{-3} torr liters/second.

3.6.2.4 ACCEPTABLE GASES

Vacuum gases which have been verified to be compatible with the VES/WGS are compatible with the VRS/VVS. Acceptable gases are defined in Section 3.6.1.5.1.

Note: Gases at 10^{-3} torr or below are compatible with the VRS/VVS.

3.7 PRESSURIZED GASES INTERFACE REQUIREMENTS

3.7.1 NITROGEN INTERFACE REQUIREMENTS

3.7.1.1 NITROGEN INTERFACE CONTROL

The integrated rack shall provide a means, located within the integrated rack envelope, to turn on and off the flow of nitrogen to the integrated rack and to control the flow of nitrogen to not exceed 5.43 kg/hr (12 lbm/hr) when connected to the nitrogen interface operating pressure range of 517 to 827 kPa (75 to 120 psia).

3.7.1.2 NITROGEN INTERFACE MDP

The MDP of the integrated rack nitrogen system shall be 1,379 kPa (200 psia).

3.7.1.3 NITROGEN INTERFACE TEMPERATURE

The integrated rack nitrogen system shall be designed for a nitrogen supply temperature range of 15.6 °C to 45 °C (60 °F to 113 °F).

3.7.1.4 NITROGEN LEAKAGE

The integrated rack shall have a nitrogen leakage rate no greater than 10^{-3} scc/sec· Leakage is considered to be loss to the cabin atmosphere associated with quick disconnects, fittings, seals, valves, and permeation through materials from, and including, the standoff UIP connection to the nitrogen flow control point in the integrated rack. All nitrogen flowing past the control point is considered usage. The integrated rack allocation for nitrogen will comprise leakage and usage.

3.7.1.5 NITROGEN PHYSICAL INTERFACE

Integrated rack connectors for the nitrogen system mating requirements to the UIP connectors are specified in paragraph 3.1.1.6.1, P.

3.7.2 ARGON INTERFACE REQUIREMENTS

3.7.2.1 ARGON INTERFACE CONTROL

The integrated rack shall provide a means, located within the integrated rack envelope, to turn on and off the flow of argon to the integrated rack and to control the flow of argon to not exceed 2.14 kg/hr (4.71 lbm/hr) when connected to the argon interface operating pressure range of 517 to 786 kPa (75 to 114 psia).

3.7.2.2 ARGON INTERFACE MDP

The MDP of the integrated rack argon system shall be 1,379 kPa (200 psia).

3.7.2.3 ARGON INTERFACE TEMPERATURE

The integrated rack argon system shall accept an argon supply temperature range of 13°C to 45°C (55.4°F to 113 °F).

3.7.2.4 ARGON LEAKAGE

The integrated rack shall have an argon leakage rate no greater than 10^{-3} scc/sec. Leakage is considered to be loss to the cabin atmosphere associated with quick disconnects, fittings, seals, valves, and permeation through materials from, and including, the standoff UIP connection to the argon flow control point in the integrated rack. All argon flowing past the control point is considered usage. The integrated rack allocation for argon will comprise leakage and usage.

3.7.2.5 ARGON PHYSICAL INTERFACE

Integrated rack connectors for the argon system mating requirements to the UIP connectors are specified in paragraph 3.1.1.6.1, S.

3.7.3 CARBON DIOXIDE INTERFACE REQUIREMENTS

3.7.3.1 CARBON DIOXIDE INTERFACE CONTROL

The integrated rack shall provide a means, located within the integrated rack envelope, to turn on and off the flow of carbon dioxide to the integrated rack and to control the flow of carbon dioxide to not exceed 0.59 kg/hr (1.30 lbm/hr) when connected to the carbon dioxide interface operating pressure range of 517 to 786 kPa (75 to 114 psia).

3.7.3.2 CARBON DIOXIDE INTERFACE MDP

The MDP of the integrated rack carbon dioxide system shall be 1,379 kPa (200 psia).

3.7.3.3 CARBON DIOXIDE INTERFACE TEMPERATURE

The integrated rack carbon dioxide system shall accept a carbon dioxide supply temperature range of 13°C to 45°C (55.4°F to 113 °F).

3.7.3.4 CARBON DIOXIDE LEAKAGE

The integrated rack shall have a carbon dioxide leakage rate no greater than 10^{-3} scc/sec. Leakage is considered to be loss to the cabin atmosphere associated with quick disconnects, fittings, seals, valves, and permeation through materials from, and including, the standoff UIP connection to the carbon dioxide flow control point in the integrated rack. All carbon dioxide flowing past the control point is considered usage. The integrated rack allocation for carbon dioxide will comprise leakage and usage.

3.7.3.5 CARBON DIOXIDE PHYSICAL INTERFACE

Integrated rack connectors for the carbon dioxide system mating requirements to the UIP connectors are specified in paragraph 3.1.1.6.1, U.

3.7.4 HELIUM INTERFACE REQUIREMENTS

3.7.4.1 HELIUM INTERFACE CONTROL

The integrated rack shall provide a means, located within the integrated rack envelope, to turn on and off the flow of helium to the integrated rack and to control the flow of helium to not exceed 0.21 kg/hr (0.47 lbm/hr) when connected to the helium interface operating pressure range of 517 to 786 kPa (75 to 114 psia).

3.7.4.2 HELIUM INTERFACE MDP

The MDP of the integrated rack helium system shall be 1,379 kPa (200 psia).

3.7.4.3 HELIUM INTERFACE TEMPERATURE

The integrated rack helium system shall accept a helium temperature range of 13°C to 45°C (55.4°F to 113°F).

3.7.4.4 HELIUM LEAKAGE

The integrated rack shall have a helium leakage rate no greater than 10^{-3} scc/sec. Leakage is considered to be loss to the cabin atmosphere associated with quick disconnects, fittings, seals, valves, and permeation through materials from, and including, the standoff UIP connection to the helium flow control point in the integrated rack. All helium flowing past the control point is considered usage. The integrated rack allocation for helium will comprise leakage and usage.

3.7.4.5 HELIUM PHYSICAL INTERFACE

Integrated rack connectors for the helium system mating requirements to the UIP connectors are specified in paragraph 3.1.1.6.1, T.

3.7.5 PRESSURIZED GAS BOTTLES

The maximum allowable leak rate for pressurized gas bottles transported in the MPLM shall be 1670 SLPM.

3.7.6 MANUAL VALVES

If a manual valve is employed for control of a pressurized gas, the valve shall be accessible as specified in paragraph 3.12.5.3 without rack rotation.

3.8 PAYLOAD SUPPORT SERVICES INTERFACES REQUIREMENTS

3.8.1 POTABLE WATER

3.8.1.1 POTABLE WATER INTERFACE CONNECTION

Integrated rack connectors for the potable water system mating requirements are specified in paragraph 3.1.1.6.1, V.

Payload-provided containers used to convey water from the Space Shuttle Orbiter prior to the deployment of the ISS potable water processor, the ISS galley, and the ISS fuel-cell water tank on-orbit will be compatible with the Orbiter water interfaces.

3.8.1.2 POTABLE WATER INTERFACE PRESSURE

The payload-provided container, and all tubing, hoses and connectors used to connect to the ISS potable water interface shall not visibly leak when exposed to the ISS potable water interface pressure of 103.4 to 206.8 kPa gauge pressure (15 to 30 psig).

3.8.1.3 POTABLE WATER USE

A. The integrated rack use of water from the ISS water system that is not returned to the cabin air as humidity shall not exceed a daily average of 2.2 kg/day (4.8 lbm/day) based upon weekly usage.

B. The total use of water by the integrated rack from the ISS water system, including A and all water returned to the cabin air as humidity, shall be limited to not exceed a daily average of 5.51 kg/day (12.15 lbm/day) based upon weekly usage.

Payload water use from the Space Shuttle Orbiter prior to the deployment of the ISS potable water processor, the ISS galley, and the ISS fuel-cell water tank on-orbit will be limited by fuel-cell water reserves available from the Orbiter after crew habitability needs have been addressed.

3.8.2 FLUID SYSTEM SERVICER

The FSS will be capable of draining, purging, filling, and recirculating Integrated Rack fluids. Integrated Racks that use the FSS shall meet the physical and functional interfaces depicted in Figure 1 of the FSS Interface Definition Drawing (IDD), 683-17103.

3.9 ENVIRONMENT INTERFACE REQUIREMENTS

3.9.1 ATMOSPHERE REQUIREMENTS

3.9.1.1 PRESSURE

The integrated rack shall be safe when exposed to pressures of 0 to 104.8 kPa (0 to 15.2 psia).

3.9.1.2 TEMPERATURE

The integrated rack shall be safe when exposed to temperatures of 10 to 46 °C (50 to 115 °F).

3.9.1.3 HUMIDITY

The integrated rack shall be designed to not cause condensation when exposed to the ISS atmosphere ranging in dewpoint from 4.4 to 15.6° C (40 to 60° F) and in relative humidity from 25 to 75%, except when condensation is an intended operation of the integrated rack. For reference, Figure 3.9.1.3–1 depicts the temperature/humidity envelope defined by these dewpoint and relative humidity ranges for air (21% oxygen, 79% nitrogen) at one atmosphere pressure (14.7 psia).

3.9.2 INTEGRATED RACK USE OF CABIN ATMOSPHERE

3.9.2.1 ACTIVE AIR EXCHANGE

A. Active air exchange with the cabin atmosphere by rack and sub-rack payloads shall be limited to air exchange for specimen metabolic purposes and for mass conservation purposes.

B. Active air exchange with the cabin atmosphere by aisle mounted payloads shall comply with paragraph 3.5.1.12.

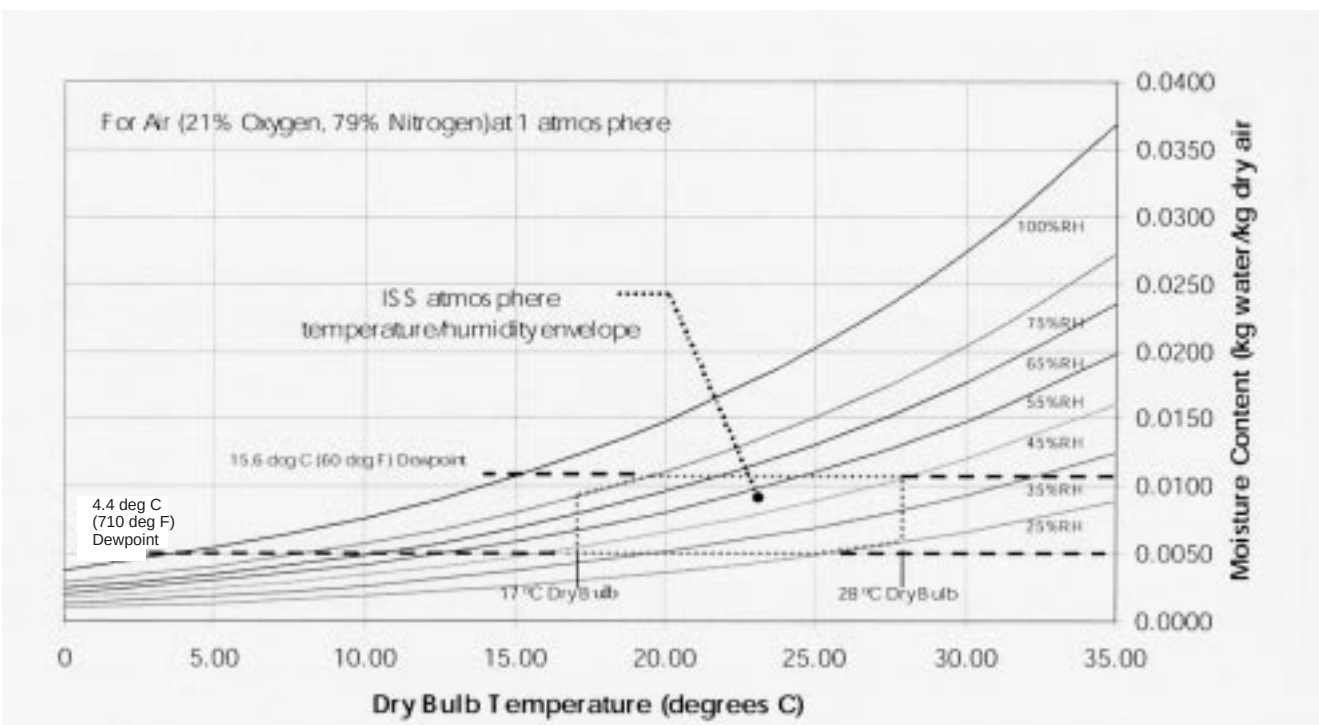

FIGURE 3.9.1.3–1 ISS TEMPERATURE/HUMIDITY ENVELOPE

3.9.2.2 OXYGEN CONSUMPTION

The integrated rack consumption of atmospheric oxygen shall not exceed 1.08 kg per day (2.38 lbm per day).

3.9.2.3 CHEMICAL RELEASES

Chemical releases to the cabin air shall be in accordance with paragraphs 209.1a and 209.1b in NSTS 1700.7, ISS Addendum.

3.9.3 RADIATION REQUIREMENTS

3.9.3.1 INTEGRATED RACK CONTAINED OR GENERATED IONIZING RADIATION

Integrated racks containing or using radioactive materials or that generate ionizing radiation shall comply with NSTS 1700.7, ISS Addendum, paragraph 212.1.

3.9.3.2 IONIZING RADIATION DOSE

Integrated racks should expect a total dose (including trapped protons and electrons) of 30 Rads(Si) per year of ionizing radiation. A review of the dose estimates in the ISS (SAIC–TN–9550 may show ionizing radiation exposure to be different than 30 Rads(Si) per year, if the intended location of the rack in the ISS is known.

3.9.3.3 SINGLE EVENT EFFECT (SEE) IONIZING RADIATION

Equipment and subsystems shall be designed not to produce an unsafe condition or one that could cause damage to equipment external to the integrated rack as a result of exposure to SEE ionizing radiation assuming exposure levels specified in SSP 30512, paragraph 3.2.1, with a shielding thickness of 25.4 mm (1000 mils).

3.9.3.4 LAB WINDOW RACK LOCATION RADIATION REQUIREMENTS

The requirements in the section apply only to the integrated rack at the lab window location, and only when the protective shield on the window is removed.

TABLE 3.9.3.4–1 SOLAR RADIATION

Wavelength Range (nm)	Solar Irradiance (W–cm^2–um^1)	Allowed Transmittance
220–240	0.005	<0.01%
240–280	0.02	<0.01%
280–300	0.055	<1.0%
300–320	0.115	<1.0%
850–1000	decays linerly from 0.12 (@ 850 nm) to 0.09 (@ 1000 nm)	<10%

3.9.3.4.1 WINDOW RACK INFRARED RADIATION REQUIREMENTS

When the lab window scratch pane is removed, shielding shall be provided for protection of the crew that reduces the infrared transmittance to less than 10.0 percent of the environment specified in Table 3.9.3.4–1 for wavelengths between 850 and 1000 nanometers.

3.9.3.4.2 WINDOW RACK ULTRAVIOLET RADIATION REQUIREMENTS

When the lab window scratch pane is removed, shielding shall be provided for protection of the crew that reduces the Ultraviolet transmittance to less than 0.01 percent for wavelengths between 220 and 280 nanometers and less than 0.1 percent for wavelengths between 280 and 320 nanometers for the environment specified in Table 3.9.3.4–1.

3.9.4 ADDITIONAL ENVIRONMENTAL CONDITIONS

The environmental information provided in Tables 3.9.4–1, and 3.9.4–2, and Figures 3.9.4–1 to 3.9.4–4 are for design and analysis purposes.

TABLE 3.9.4–1 ENVIRONMENTAL CONDITIONS

Environmental Condition	Value	
Atmospheric Conditions on ISS		
Pressure Extremes	0 to 104.8 kPa (0 to 15.2 psia)	
Normal operating pressure	See Figure 3.9.4–1	
Oxygen partial pressure	See Figure 3.9.4–1	
Nitrogen partial pressure	See Figure 3.9.4–1	
Dewpoint	4.4 to 15.6 °C (40 to 60 °F) ref. figure 3.9.1.3–1	
Percent relative humidity	25 to 75% ref. figure 3.9.1.3–1	
Carbon dioxide partial pressure during normal operations with 6 crewmembers plus animals	24-hr average exposure 5.3 mm Hg Peak exposure 7.6 mm Hg	
Carbon dioxide partial pressure during crew changeout with 11 crewmembers plus animals	24-hr average exposure 7.6 mm Hg Peak exposure 10 mm Hg	
Cabin air temperature in USL, JEM, APM, and CAM	17 to 28 °C (63 to 82 °F)	
Cabin air temperature in Node 1	17 to 31 °C (63 to 87 °F)	
Air velocity (Nominal)	0.051 to 0.203 m/s (10 to 40 ft/min)	
Airborne microbes	Less than 1000 CFU/m3	
Atmosphere particulate level	Average less than 100,000 particles/ft3 for particles less than 0.5 microns in size	
MPLM Air Temperatures	**Passive Flights**	**Active Flights**
Pre-Launch	15 to 24°C (59 to 75.2°F)	14 to 30 °C (57.2 to 86 °F)
Launch/Ascent	14 to 24°C (57.2 to 75.2°F)	20 to 30 °C (68 to 86 °F)
On-orbit (Cargo Bay + Deployment)	24 to 44°C (75.2 to 111.2°F)	16 to 46 °C (60.8 to 114.8 °F)
On-orbit (On-Station)	23 to 45°C (73.4 to 113°F)	16 to 43 °C (60.8 to 109.4 °F)
On-orbit (Retrieval + Cargo Bay)	17 to 44°C (62.6 to 111.2°F)	11 to 45 °C (51.8 to 113 °F)
Descent/Landing	13 to 43°C (55.4 to 109.4 °F)	10 to 42 °C (50 to 107.6 °F)
Post-Landing	13 to 43°C (55.4 to 109.4 °F)	10 to 42 °C (50 to 107.6 °F)
Ferry Flight	15.5 to 30°C (59.9 to 86 °F)	15.5 to 30 °C (59.9 to 86 °F)
MPLM Maximum Dewpoint Temperatures		
Pre-Launch	13.8°C (56.8°F)	12.5°C (54.5°F)
Launch/Ascent	13.8°C (56.8°F)	12.5°C (54.5°F)
On-orbit (Cargo Bay + Deployment)	13.8°C (56.8°F)	12.5°C (54.5°F)
On-orbit (On-Station)	15.5°C (60°F)	15.5°C (60°F)
On-orbit (Retrieval + Cargo Bay)	10°C (50°F)	10°C (50°F)
Descent/Landing	10°C (50°F)	10°C (50°F)
Post-Landing	10°C (50°F)	10°C (50°F)
Ferry Flight	15.5°C (60°F)	15.5°C (60°F)
Thermal Conditions		
USL module wall temperature	13 °C to 43 °C (55 °F to 109 °F)	
JEM module wall temperature	13 °C to 45 °C (55 °F to 113 °F)	
APM module wall temperature	13 °C to 43 °C (55 °F to 109 °F) **(TBR #4)**	
CAM module wall temperature	13 °C to 43 °C (55 °F to 109 °F) **(TBR #5)**	
Other integrated payload racks	Front surface less than 37 °C (98.6 °F)	
*** Microgravity**		
Quasi-Steady State Environment	See Figures 3.9.4–2, 3.9.4–3 and Table 3.9.4–2	
Vibro-acoustic Environment	See Figure 3.9.4–4	
General Illumination	108 Lux (10 fc) measured 30 inches from the floor in the center of the aisle	

*Note: Data reflects best available information as of May, 1997. Does not include effects of CAM.

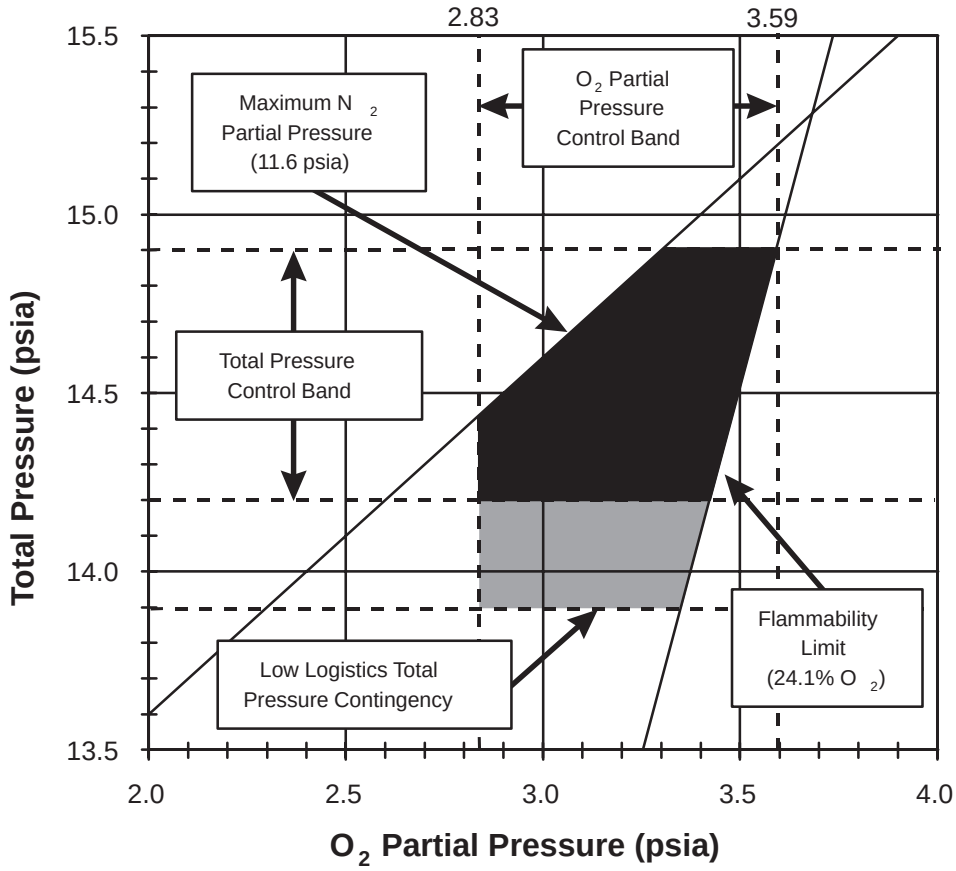

FIGURE 3.9.4–1 OPERATING LIMITS OF THE ISS ATMOSPHERIC TOTAL PRESSURE, AND NITROGEN AND OXYGEN PARTIAL PRESSURES

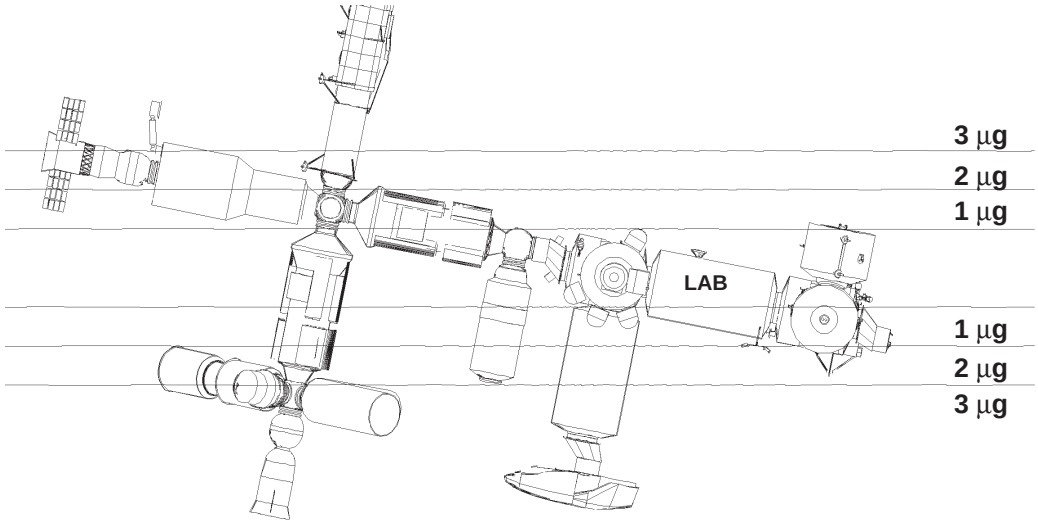

FIGURE 3.9.4–2 ASSEMBLY COMPLETE QUASI-STEADY STATE MICROGRAVITY CONTOURS (SIDE)

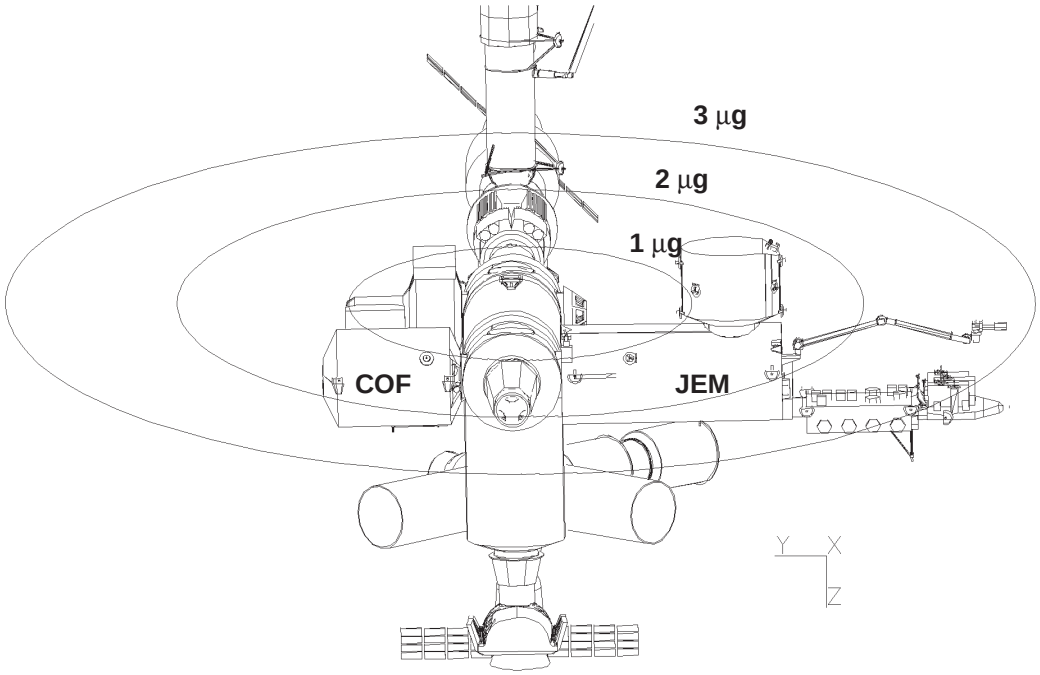

FIGURE 3.9.4–3 ASSEMBLY COMPLETE QUASI-STEADY STATE MICROGRAVITY CONTOURS (FRONT)

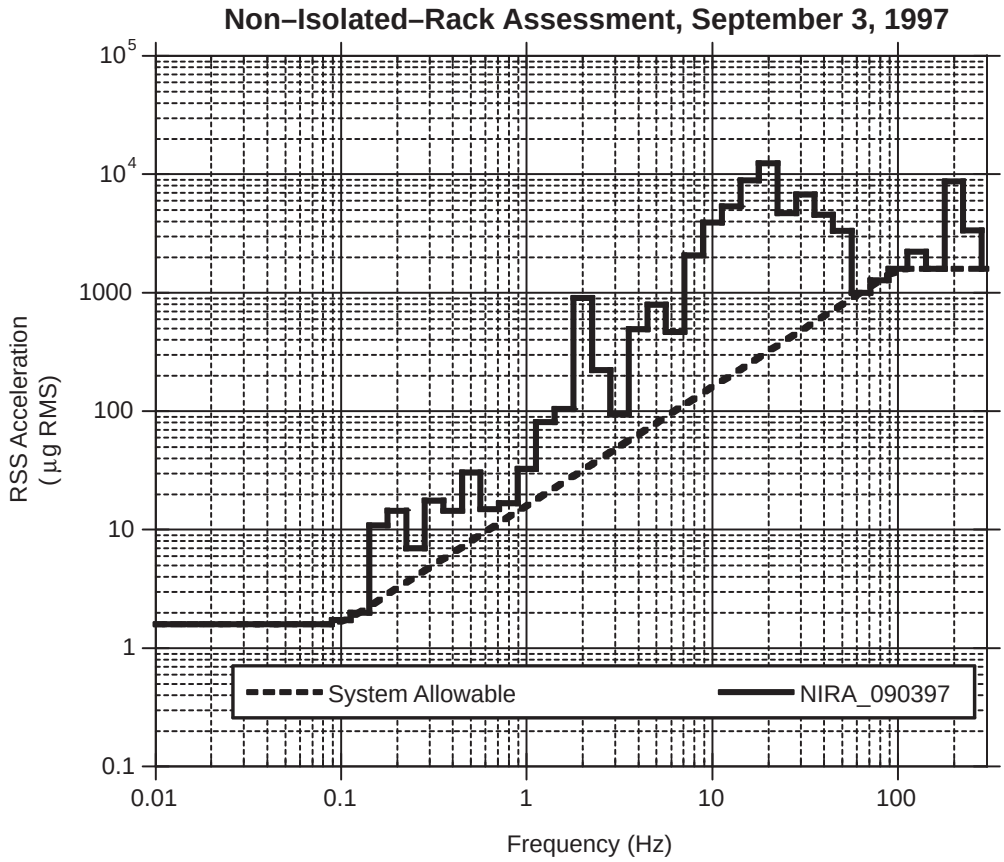

Note: The Non-Isolated Rack Assessment (NIRA) is a prediction of the "vehicle induced", Assembly Complete, acceleration environment at non-isolated ISPRs during microgravity mode. The acceleration environment depicted represents a 100 second, root-mean-square average per one-third octave band from 0.01 to 300 Hz at the rack to module structural interfaces. It is intended to represent the enveloped acceleration response over all the non-isolated ISPR locations in the U.S. Lab, JEM, and APM. The NIRA is based on the DAC–4 ISS assessment of vehicle microgravity compliance which computed the acceleration response to all significant U.S. and Russian segment disturbance sources. To account for the ESA and NASDA disturbance sources, the NIRA at this time assumes that the acceleration responses produced by the ESA and NASDA disturbances are equivalent to the responses produced by the U.S. Lab, Hab, and Airlock disturbances combined less exercise equipment. A similar assumption is also used to account for the CAM in this NIRA. Thus, with these assumptions, the NIRA accounts for all "vehicle induced" accelerations during microgravity mode. The NIRA does not account for "payload induced" accelerations nor "crew induced" accelerations, other than those produced by the crew when using exercise devices. The NIRA is expected to be updated as improved predictions become available.

FIGURE 3.9.4–4 ASSEMBLY COMPLETE VIBRATORY ENVIRONMENT

TABLE 3.9.4–2 ASSEMBLY COMPLETE QUASI–STEADY STATE MICROGRAVITY ENVIRONMENT

Location (ISPRs)	Magnitude (μg)	Stability (μg)	Unit Vector Components X	Y	Z	Angle (deg)	Location (Others)	Magnitude (μg)	Stability (μg)	Unit Vector Components X	Y	Z	Angle (deg)
USL–C1	**0.525**	0.126	0.641	–0.109	0.760	17.370	USL–CG	0.793	0.137	0.466	–0.052	0.883	10.360
USL–C2	**0.468**	0.116	0.721	–0.133	0.680	20.710	APM–CG	1.624	0.157	0.288	–0.533	0.795	5.547
USL–C3	**0.419**	0.100	0.819	–0.165	0.549	24.820	APM–CLG1	1.010	0.151	0.350	–0.649	0.676	8.635
USL–C4	**0.380**	0.078	0.922	–0.204	0.330	28.370	APM–CLG2	1.120	0.154	0.313	–0.726	0.612	7.944
USL–C5	**0.356**	0.064	0.972	–0.237	–0.002	25.280	RS–FGB	1.119	0.139	–0.003	–0.060	–0.998	7.802
USL–S1	1.062	0.145	0.385	–0.227	0.895	7.927	RS–SM	2.179	0.129	–0.099	–0.038	–0.994	3.655
USL–S2	**0.989**	0.143	0.400	–0.248	0.883	8.421	JEM–CG	1.811	0.157	0.244	0.745	0.621	5.143
USL–S3	**0.917**	0.141	0.417	–0.272	0.867	8.973	JEF1–F1	2.954	0.165	0.223	0.627	0.746	3.325
USL–S4	**0.846**	0.138	0.437	–0.300	0.848	9.859	JEF2–A1	2.613	0.160	0.218	0.706	0.674	3.646
USL–P1	1.019	0.145	0.396	0.166	0.903	8.310	JEF3–F2	3.039	0.167	0.216	0.658	0.722	3.265
USL–P2	**0.945**	0.143	0.413	0.180	0.893	8.866	JEF4–A2	2.710	0.162	0.209	0.734	0.646	3.558
USL–P4	**0.799**	0.138	0.458	0.215	0.862	10.230	JEF5–F3	3.129	0.169	0.209	0.685	0.698	3.208
JPM1–A1	1.250	0.150	0.348	0.333	0.877	7.015	JEF6–A3	2.811	0.164	0.201	0.760	0.619	3.477
JPM2–F1	1.480	0.154	0.325	0.282	0.903	6.095	JEF7–F4	3.223	0.171	0.203	0.710	0.674	3.155
JPM3–A2	1.296	0.151	0.334	0.433	0.838	6.819	JEF8–A4	2.915	0.167	0.194	0.782	0.593	3.401
JPM4–F2	1.519	0.154	0.316	0.370	0.874	5.979	JEF9–O1	3.303	0.174	0.188	0.771	0.608	3.135
JPM5–A3	1.355	0.151	0.318	0.520	0.793	6.570	JEF10–O2	3.091	0.174	0.174	0.838	0.517	3.334
JPM6–F3	1.569	0.155	0.305	0.450	0.839	5.824	JEF11–U1	2.456	0.169	0.184	0.861	0.474	4.064
JPM7–A4	1.425	0.152	0.301	0.594	0.746	6.288	JEF12–U2	2.553	0.171	0.170	0.890	0.423	3.955
JPM8–A5	1.505	0.153	0.284	0.657	0.699	5.992	S3LO	3.299	0.223	0.038	–0.994	–0.104	3.918
JPM9–F5	1.700	0.156	0.280	0.584	0.762	5.441	S3LI	2.945	0.212	0.042	–0.991	–0.124	4.180
JPM10–F6	1.778	0.157	0.266	0.638	0.723	5.234	S3UO	3.958	0.209	–0.056	–0.846	–0.530	3.142
APM–FWD1	1.605	0.155	0.305	–0.386	0.871	5.573	S3UI	3.644	0.196	–0.062	–0.810	–0.584	3.222
APM–FWD2	1.681	0.157	0.291	–0.465	0.836	5.370	P3LO	3.260	0.191	0.022	0.973	–0.231	3.355
APM–FWD3	1.768	0.159	0.277	–0.532	0.800	5.167	P3UO	4.043	0.176	–0.068	0.780	–0.622	2.494
APM–FWD4	1.863	0.161	0.263	–0.590	0.763	4.968							
APM–AFT1	1.397	0.152	0.318	–0.451	0.834	6.275							
APM–AFT2	1.482	0.154	0.300	–0.534	0.791	5.989	10 ISPRs Have Quasi–Steady Magnitude </= 1.0 g						
APM–AFT3	1.578	0.157	0.282	–0.603	0.747	5.709							
APM–AFT4	1.682	0.160	0.264	–0.659	0.704	5.450							

3.10 FIRE PROTECTION INTERFACE REQUIREMENTS

3.10.1 FIRE PREVENTION

Integrated racks shall meet the fire prevention requirements specified in NSTS 1700.7, ISS Addendum, paragraph 220.10a.

3.10.2 PAYLOAD MONITORING AND DETECTION REQUIREMENTS

Note: The ISS monitors and detects fire events within payloads containing potential fire sources by using a station approved rack smoke detector. For payload volumes that contain a potential fire source but do not exchange air with the rack smoke detector because there is no forced air circulation, or for metabolic or science isolation purposes, parameter monitoring can be used as an alternative. Use of parameter monitoring will be presented to and approved by the PSRP during the phased safety reviews. Volumes containing no potential fire sources do not require detection capabilities. Small aisle mounted equipment (laptop computers, etc.) may not require detection capabilities. Safety monitoring and detection requirements are specified in NSTS 1700.7, ISS Addendum, paragraph 220.10b.

3.10.2.1 SMOKE DETECTION

3.10.2.1.1 SMOKE DETECTOR

A. Integrated racks that contain potential fire source and have forced air circulation shall use a smoke detector that meets the requirements specified in 683–10007 and SSP 30262:013.

B. Integrated racks requiring a smoke detector shall provide a smoke detector interface at the J43 connection with interface characteristics meeting the requirements specified in paragraph 3.3.10.

3.10.2.1.2 FORCED AIR CIRCULATION INDICATION

Integrated racks requiring a smoke detector shall provide a signal and data indicating whether or not the air flow specified in SSP 30262:013, paragraph 3.6.6, is being provided to the smoke detector when the smoke detector is in use.

3.10.2.1.3 FIRE DETECTION INDICATOR

A. Integrated racks requiring a smoke detector shall provide a red Fire Detection Indicator LED in an easily visible location on the front of the rack that is powered by the ISS when the smoke detector senses smoke.

B. Integrated racks requiring a fire detection indicator shall provide a fire detection indicator interface at the J43 connection with interface characteristics meeting the requirements specified in paragraph 3.3.10.

3.10.2.2 PARAMETER MONITORING

3.10.2.2.1 PARAMETER MONITORING USE

Integrated rack or sub-rack volumes that contain a potential fire source and do not exchange air with the rack smoke detector because no forced air circulation is present, or for metabolic or science isolation purposes shall provide sensors that will monitor that volume to detect a fire event.

Note: The type, number and location of the sensors as well as the determination of whether or not the volume contains a potential fire source will be presented to and approved by the PSRP during the phased safety reviews.

3.10.2.2.2 PARAMETER MONITORING RESPONSE

3.10.2.2.2.1 PARAMETER MONITORING IN SUBRACK

A. The integrated rack shall provide manual and automatic capabilities to terminate forced air circulation (if present) and power to each sub-rack volume that is monitored with parameter monitoring.

Note: For integrated racks where the payload MDM provides the monitoring function, the P/L MDM is capable of sending a command to the rack to command the rack to power off the subrack to meet the automatic requirement.

B. The integrated rack shall respond to an “out of bounds” condition within a separate, sub-rack volume that is monitored with parameter monitoring by sending data to indicate the location and cause of the “out of bounds” condition to the payload MDM in the format specified in paragraph 3.3.5.1.4.

Note: An “out of bounds” condition refers to the condition when parameter monitoring sensors detect an off nominal state.

3.10.2.2.2.2 PARAMETER MONITORING IN INTEGRATED RACK

A. Integrated racks only using parameter monitoring shall provide manual and automatic capabilities to terminate forced air circulation (if present) and power to the integrated rack.

Note: Use of the Rack Maintenance Switch meets the manual requirement. For integrated racks where the payload MDM provides the monitoring function, the P/L MDM is capable of sending a command to the module RPC that will power off the rack to meet the automatic requirement.

B. Integrated racks only using parameter monitoring shall respond to an “out of bounds” condition by sending data to indicate the location and cause of the “out of bounds” condition to the payload MDM in the format specified in paragraph 3.3.5.1.4.

3.10.3 FIRE SUPPRESSION

Note: Each separate integrated rack and sub-rack equipment volume which contains a potential fire source will require fire suppression capabilities. Determination of potential fire sources will be presented to and approved by the PSRP during the phased safety reviews. Safety fire suppression requirements are specified in NSTS 1700.7, ISS Addendum, paragraph 220.10c.

3.10.3.1 PORTABLE FIRE EXTINGUISHER

A. Integrated rack and sub-rack enclosed volumes that have a panel thickness less than or equal to 3.175 mm (0.125 inch) and contain a potential fire source shall provide a PFE access port that is between 12.7 mm (0.5 inch) and 25.4 mm (1.0 inch) in diameter. PFE discharge characteristics are specified in Figure 3.1.1.4–1.

B. Integrated rack and sub-rack enclosed volumes that have a panel thickness greater than 3.175 mm (0.125 inch) and contain a potential fire source shall provide a PFE access port that is 25.4 mm (1.0 inch) in diameter. PFE discharge characteristics are specified in Figure 3.1.1.4–1.

Note 1: The final determination of whether or not a payload volume contains a potential fire source and requires a PFE access port will be presented to and approved by the PSRP during the phased safety reviews.

Note 2: The ISS PFE has an “open cabin” diffuser nozzle which will be used to surround fire events that are not in an enclosed volume with suppressant.

Note 3: Internal volumes are volumes presented to and approved by the PSRP as sealed containers do not require PFE access ports.

3.10.3.2 FIRE SUPPRESSION ACCESS PORT ACCESSIBILITY

Each integrated rack requiring an access port shall have a front face designed to accommodate the PFE nozzle and bottle specified in Figures 3.10.3.2–1 and 3.10.3.2–2 so the PFE nozzle can interface to the PFE port.

Closed volume nozzle dimensions specified in Figure 3.10.3.2–2

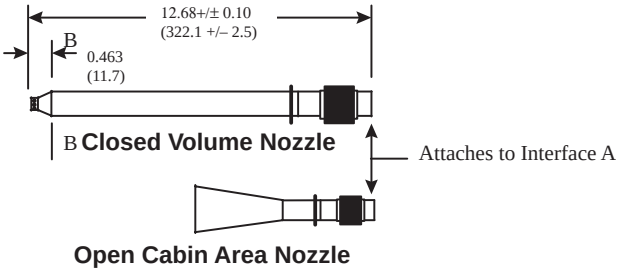

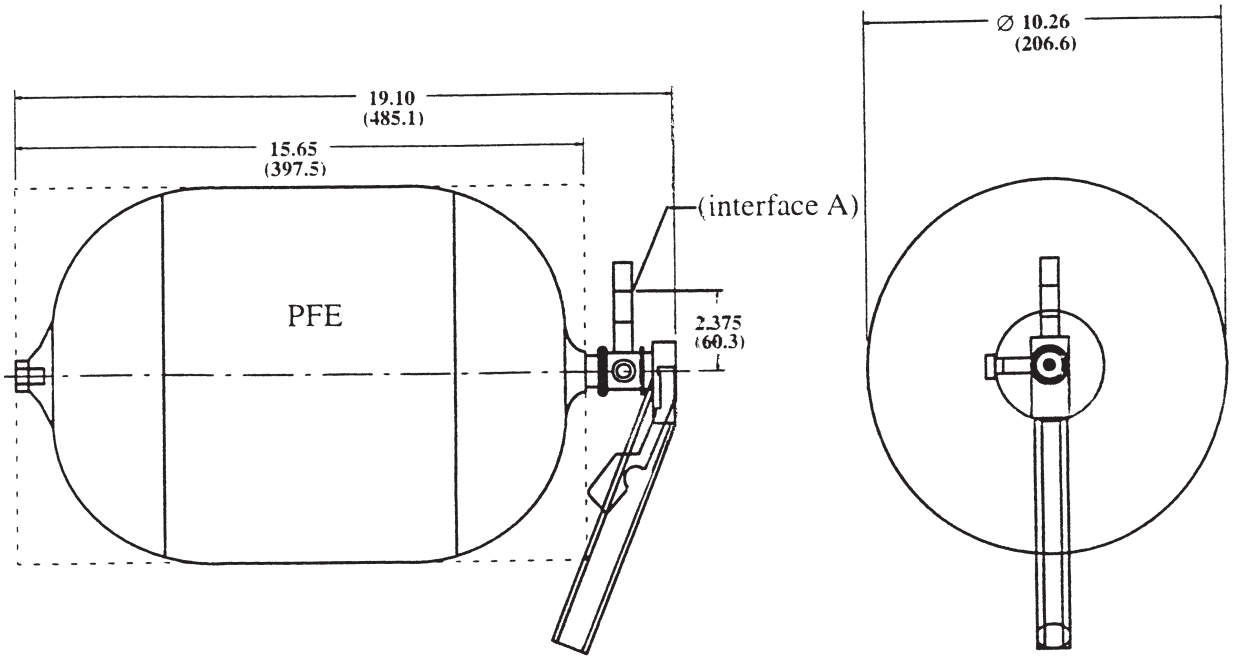

Note: Measurements from PFE centerline to point B with the closed cabin Nozzle attached is approximately 14.59 inches (370.6 mm)

FIGURE 3.10.3.2–1 MANUAL FIRE SUPPRESSION HARDWARE ENVELOPE

r

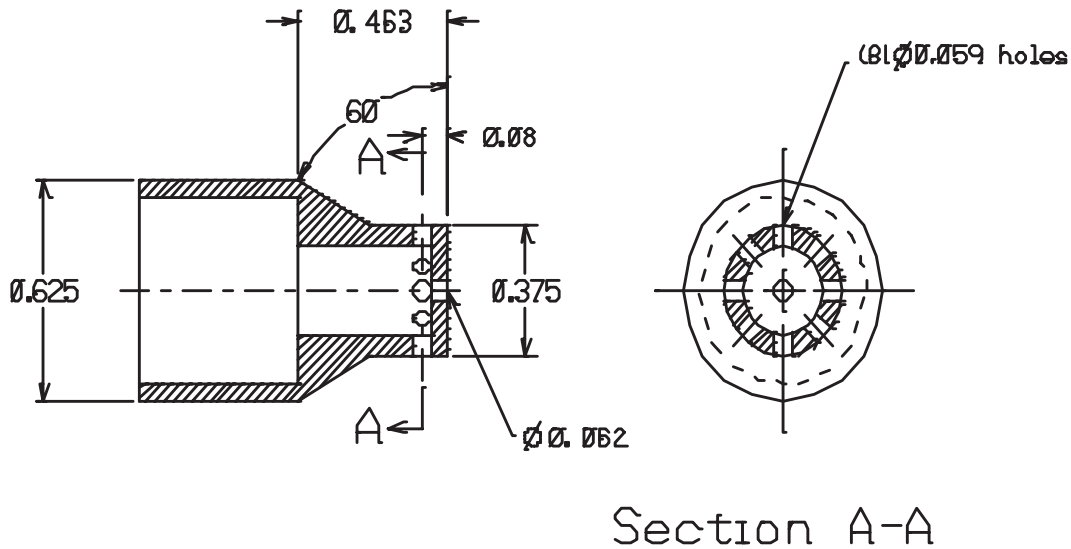

Note: Linear dimensions are in inches, angular dimensions are in degrees.

FIGURE 3.10.3.2–2 CLOSED VOLUME PFE NOZZLE

3.10.3.3 FIRE SUPPRESSANT DISTRIBUTION

The internal layout of integrated racks shall allow ISS PFE fire suppressant to be distributed to the entire volume that PFE Access Port serves, lowering the Oxygen concentration to or below 10.5% by volume at any point within the enclosure within one minute. Volumes specified in section 3.10.3.4 do not apply to this requirement.

Note: The position of integrated rack internal components near the PFE Access Port should not prevent fire suppressant to be discharged into the volume the PFE Access Port serves. PFE discharge characteristics are specified in Figure 3.1.1.4–1 and PFE closed volume nozzle dimensions are specified in Figure 3.10.3.2–2.

3.10.3.4 DELETED

3.10.3.4.1 DELETED

3.10.3.4.2 DELETED

3.10.4 LABELING

A. Integrated racks requiring an access port shall label the PFE access port with a SDD32100397–002 “Fire Hole Decal” specified in JSC 27260, “Decal Process Document and Catalog”.

B. Integrated racks requiring a Fire Detection Indicator LED shall label the Fire Detection Indicator LED “SMOKE INDICATION” as specified in MSFC–STD–275, using 3.96mm (0.156 inch) letters, style Futura Demibold, and color 37038 (Lusterless Black) per FED–STD–595.

3.11 MATERIALS AND PARTS INTERFACE REQUIREMENTS

3.11.1 MATERIALS AND PARTS USE AND SELECTION

Integrated racks shall use materials and parts that meet the materials requirements specified in NSTS 1700.7, ISS Addendum.

3.11.1.1 COMMERCIAL PARTS

Commercial /Off The Shelf (COTS) parts used in integrated racks shall meet the materials requirements specified in NSTS 1700.7, ISS Addendum.

3.11.2 FLUIDS

A. Integrated racks which connect to ISS fluid systems shall use fluids that meet the requirements specified in SSP 30573.

B. Integrated racks which connect to ISS fluid systems shall meet the fluid system cleanliness levels specified in SSP 30573.

C. Integrated racks using ISS aqueous fluid systems shall use internal materials that are compatible according to MSFC–SPEC–250, Table III or that will not create a potential greater than 0.25 Volts with the ISS system internal materials due to a dissimilar metal couple.

3.11.3 CLEANLINESS

Integrated racks shall conform to Visibly Clean-Sensitive (VC–S) cleanliness requirements as specified in SN–C–0005.

3.11.4 FUNGUS RESISTANT MATERIAL

Integrated racks that are intended to remain on-orbit for more than one year shall use fungus resistant materials according to the requirements specified in SSP 30233, paragraph 4.2.10.

3.12 HUMAN FACTORS INTERFACE REQUIREMENTS

3.12.1 STRENGTH REQUIREMENTS

Forces and torque's required to remove, replace, operate, control, and maintain payload hardware and equipment on-orbit shall be equal to or less than the strength values given below.

A. For operation and control of payload hardware equipment:

   (1) Grip Strength – To remove, replace and operate payload hardware, grip strength required shall be less than 254 N (57lbf).

   (2) Linear Forces – Linear forces required to operate or control payload hardware or equipment shall be less than the strength values for the 5th percentile female, defined as 50% of the strength values shown in Figure 3.12.1–1 and 60% of the strength values shown in Figure 3.12.1–2.

   (3) Torques – Torques required to operate or control payload hardware or equipment shall be less than the strength values for the 5th percentile female, defined as 60% of the calculated 5th percentile male capability shown in Figure 3.12.1–3.

B. Forces required for maintenance of payload hardware and equipment shall be less than the 5th percentile male strength values shown in Figures 3.12.1–1, 3.12.1–2, 3.12.1–3, 3.12.1–4, and 3.12.1–5.

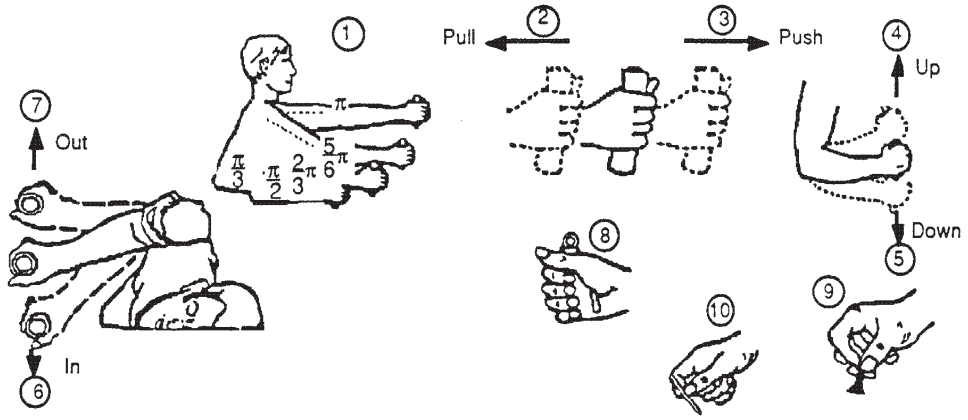

Arm strength (N)												
(1)	(2)		(3)		(4)		(5)		(6)		(7)	
Degree of elbow flexion (rad)	Pull		Push		Up		Down		In		Out	
	L**	R**	L	R	L	R	L	R	L	R	L	R
π	222	231	187	222	40	62	58	76	58	89	36	62
5/6 π	187	249	133	187	67	80	80	89	67	89	36	67
2/3 π	151	187	116	160	76	107	93	116	89	98	45	67
1/2 π	142	165	98	160	76	89	93	116	71	80	45	71
1/3 π	116	107	96	151	67	89	80	89	76	89	53	76

Hand and thumb-finger strength (N)				
	(8)		(9)	(10)
	Hand grip			
	L	R	Thumb-finger grip (Palmer)	Thumb-finger grip (tips)
Momentary hold	250	260	60	60
Sustained hold	145	155	35	35

* Elbow angle shown in radians
** L = Left; R = Right

Arm strength (lb)												
(1)	(2)		(3)		(4)		(5)		(6)		(7)	
Degree of elbow flexion (deg)	Pull		Push		Up		Down		In		Out	
	L	R*	L	R	L	R	L	R	L	R	L	R
180	50	52	42	50	9	14	13	17	13	20	8	14
150	42	56	30	42	15	18	18	20	15	20	8	15
120	34	42	26	36	17	24	21	26	20	22	10	15
90	32	37	22	36	17	20	21	26	16	18	10	16
60	26	24	22	34	15	20	18	20	17	20	12	17

Hand, and thumb-finger strength (lb)				
	(8)		(9)	(10)
	Hand grip			
	L	R	Thumb-finger grip (Palmer)	Thumb-finger grip (tips)
Momentary hold	56	59	13	13
Sustained hold	33	35	8	8

* Left; R = Right

FIGURE 3.12.1–1 ARM, HAND, AND THUMB/FINGER STRENGTH (5TH PERCENTILE MALE DATA)

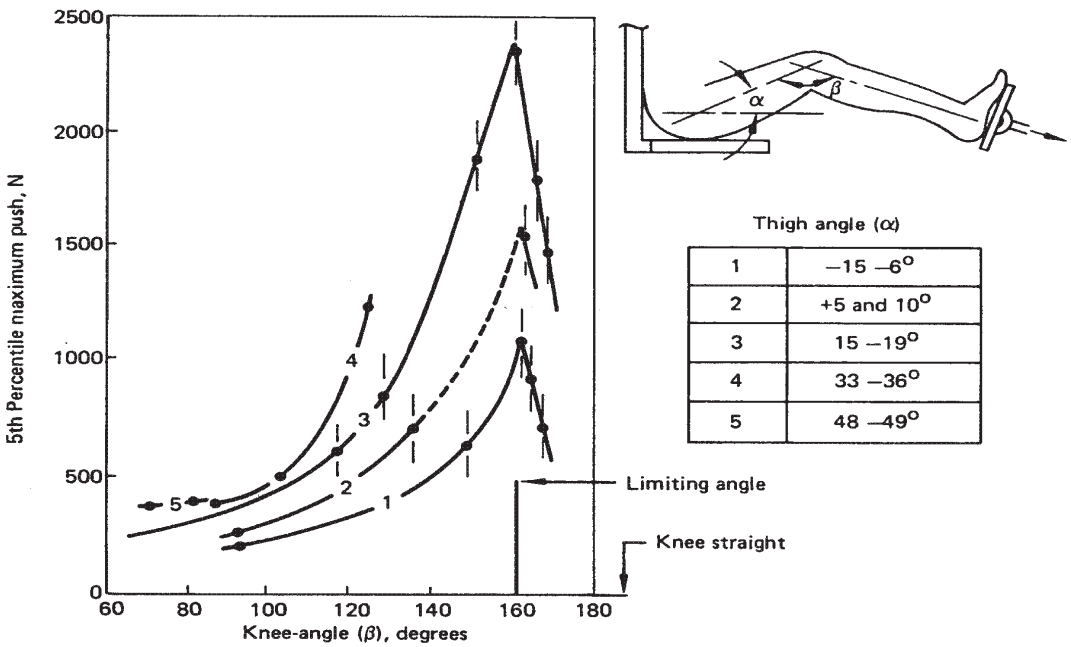

FIGURE 3.12.1–2 LEG STRENGTH AT VARIOUS KNEE AND THIGH ANGLES (5TH PERCENTILE MALE DATA)

	Unpressurized suit, bare handed	
	Mean	SD
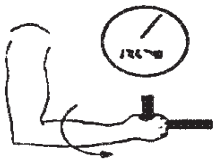 Maximum torque: Suppination, Nm (lb-in.)	13.73 (121.5)	3.41 (30.1)
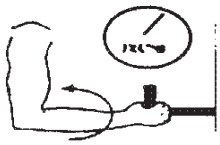 Maximum torque: Pronation, Nm (lb-in.)	17.39 (153.9)	5.08 (45.0)

FIGURE 3.12.1–3 TORQUE STRENGTH

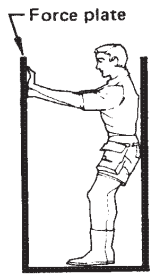

Force-plate (1) height	Distances (2)	Force, N (lbf) Means	Force, N (lbf) SD
		Both hands	
100 percent of shoulder height	50	583 (131)	142 (32)
	60	667 (150)	160 (36)
	70	983 (221)	271 (61)
	80	1285 (289)	400 (90)
	90	979 (220)	302 (68)
	100	645 (145)	254 (57)
		Preferred hand	
	50	262 (59)	67 (15)
	60	298 (67)	71 (16)
	70	360 (81)	98 (22)
	80	520 (117)	142 (32)
	90	494 (111)	169 (38)
	100	427 (96)	173 (39)
	Percent of thumb-tip reach *		

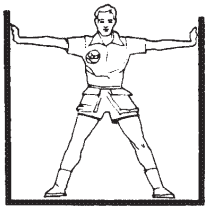

100 percent of shoulder height	50	369 (83)	138 (31)
	60	347 (78)	125 (28)
	70	520 (117)	165 (37)
	80	707 (159)	191 (32)
	90	325 (73)	133 (30)
	Percent of span **		

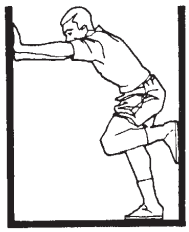

Force-plate (1) height	Distances (2)	Force, N (lbf) Means	Force, N (lbf) SD
50	100	774 (174)	214 (48)
50	120	778 (175)	165 (37)
70	120	818 (184)	138 (31)
Percent of shoulder height		1-g applicable data	

NOTES:

(1) Height of the center of the force plate - 200 mm (8 in) high by 254 mm (10 in) long - upon which force is applied.

(2) Horizontal distance between the vertical surface of the force plate and the opposing vertical surface (wall or footrest, respectively) against which the subject brace themselves.

() Thumb-tip reach - distance from backrest to tip of subject's thumb as thumb and fingertips are pressed together.

() Span - the maximal distance between a person's fingertips as he extends his arms and hands to each side.

(3) 1-g data.

FIGURE 3.12.1–4 MAXIMAL STATIC PUSH FORCES

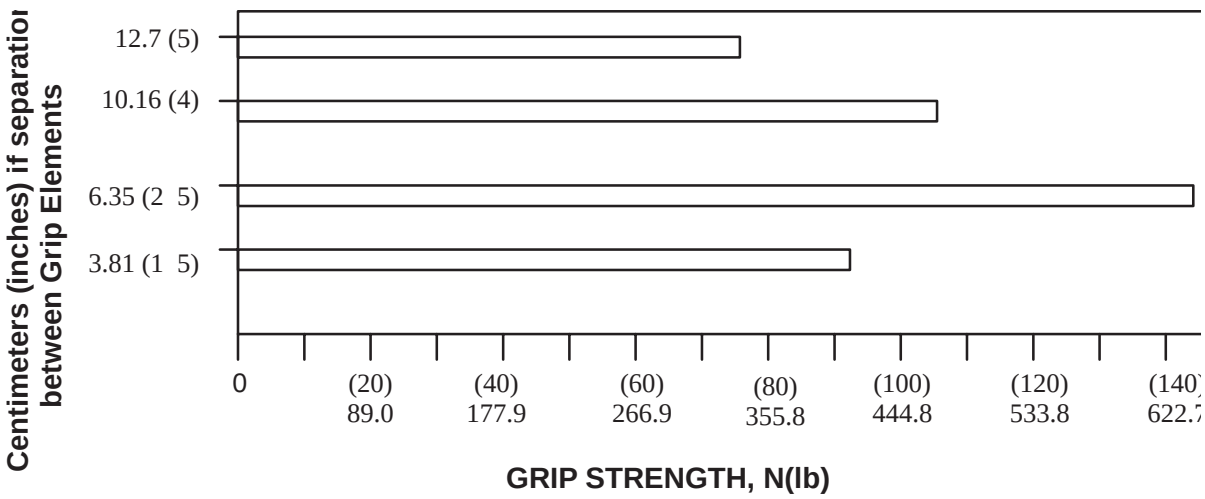

FIGURE 3.12.1–5 MALE GRIP STRENGTH AS A FUNCTION OF THE SEPARATION BETWEEN GRIP ELEMENTS

3.12.2 BODY ENVELOPE AND REACH ACCESSIBILITY

3.12.2.1 ADEQUATE CLEARANCE

The integrated rack shall provide clearance for the crew to perform installation, operations, and maintenance tasks, including clearance for hand access, tools and equipment used in these tasks.

3.12.2.2 ACCESSIBILITY

A. Payload hardware shall be geometrically arranged to provide physical and visual access for all payload installation, operations, and maintenance tasks. Payload ORUs should be removable along a straight path until they have cleared the surrounding structure.

B. IVA clearances for finger access shall be provided as given in Figure 3.12.2.2–1.

Minimal finger-access to first joint			
Push button access:	Bare hand:	32 mm dia (1.26 in)	
	Thermal gloved hand:	38 mm dia (1.5 in)	
Two finger twist access:	Bare hand:	object plus 50 mm (1.97 in)	
	Thermal gloved hand:	object plus 65 mm (2.56 in)	

FIGURE 3.12.2.2–1 MINIMUM SIZES FOR ACCESS OPENINGS FOR FINGERS

3.12.2.3 FULL SIZE RANGE ACCOMMODATION

All payload workstations and hardware having crew nominal operations and planned maintenance shall be sized to meet the functional reach limits for the 5th percentile Japanese female and yet shall not constrict or confine the body envelope for the 95th percentile American male as specified in SSP 50005, section 3.

3.12.3 HABITABILITY

3.12.3.1 HOUSEKEEPING

3.12.3.1.1 CLOSURES OR COVERS

Closures or covers shall be provided for any area of the payload that is not designed for routine cleaning.

3.12.3.1.2 BUILT-IN CONTROL

A. Payload containers of liquids or particulate matter shall have built-in equipment/methods for control of vaporization, material overflow, or spills.

B. The capture elements, including grids, screens, or filter surfaces shall be accessible for replacement or cleaning without dispersion of the trapped materials.

C. Deleted.

3.12.3.1.3 DELETED

3.12.3.1.4 DELETED

3.12.3.1.5 ONE-HANDED OPERATION

Cleaning equipment and supplies shall be designed for one-handed operation or use.

3.12.3.1.6 DELETED

3.12.3.2 TOUCH TEMPERATURE

3.12.3.2.1 CONTINUOUS/INCIDENTAL CONTACT - HIGH TEMPERATURE

When integrated rack surfaces whose temperature exceeds 49° C (120° F), which are subject to continuous or incidental contact, are exposed to crewmember's bare skin contact, protective equipment shall be provided to the crew and warning labels shall be provided at the surface site. This also applies to surfaces not normally exposed to the cabin in accordance with the NASA IVA Touch Temperature Safety interpretation letter JSC, MA2–95–048.

3.12.3.2.2 CONTINUOUS/INCIDENTAL CONTACT – LOW TEMPERATURE

When Integrated rack surfaces below –18° C (0° F), which are subject to continuous or incidental contact, are exposed to crewmember's bare skin contact, protective equipment shall be provided to the crew and warning labels shall be provided at the surface site. This also applies to surfaces not normally exposed to the cabin in accordance with the NASA IVA Touch Temperature Safety interpretation letter JSC, MA2–95–048.

3.12.3.3 ACOUSTIC REQUIREMENTS

An Integrated Rack (see Glossary of Terms) will not be allowed to operate above NC–40 except in those cases when it meets the Intermittent Noise Source requirements specified in section 3.12.3.3.2.

Due to the multitude of payload operations, an integrated rack may exhibit multiple acoustic noise source characteristics. These characteristics affect the requirements an integrated rack must satisfy in order to operate on-orbit.

For example, an integrated rack which operates less than eight hours in any one 24 hour period and generates a SPL equal to or in excess of 37 decibels (dBA) measured at 0.6 meter distance from the noisiest part of the rack, is an Intermittent Noise Source. An integrated rack which produces intermittent noise will need to ensure the cumulative time it generates intermittent noise within a 24 hour period satisfies the Intermittent Noise Limit requirements. An integrated rack which operates for more than eight hours in a 24 hour period and generates a SPL equal to or in excess of 37 decibels (dBA) measured at 0.6 meter distance from the noisiest part of the rack is a Continuous Noise Source. An integrated rack which produces continuous noise will be allowed to operate under certain conditions: 1.) if the integrated rack's noise level always stays below NC–40, or 2.) if the cumulative time it generates noise above NC–40 during a 24 hour period satisfies the Intermittent Noise Limit requirements (see Figure 3.12.3.3–1).

Each Integrated Rack will submit an Acoustics Noise Control Plan (ANCP). The ANCP will identify all testing and analysis required to manage the noise produced by the rack throughout its operational life span on the ISS.

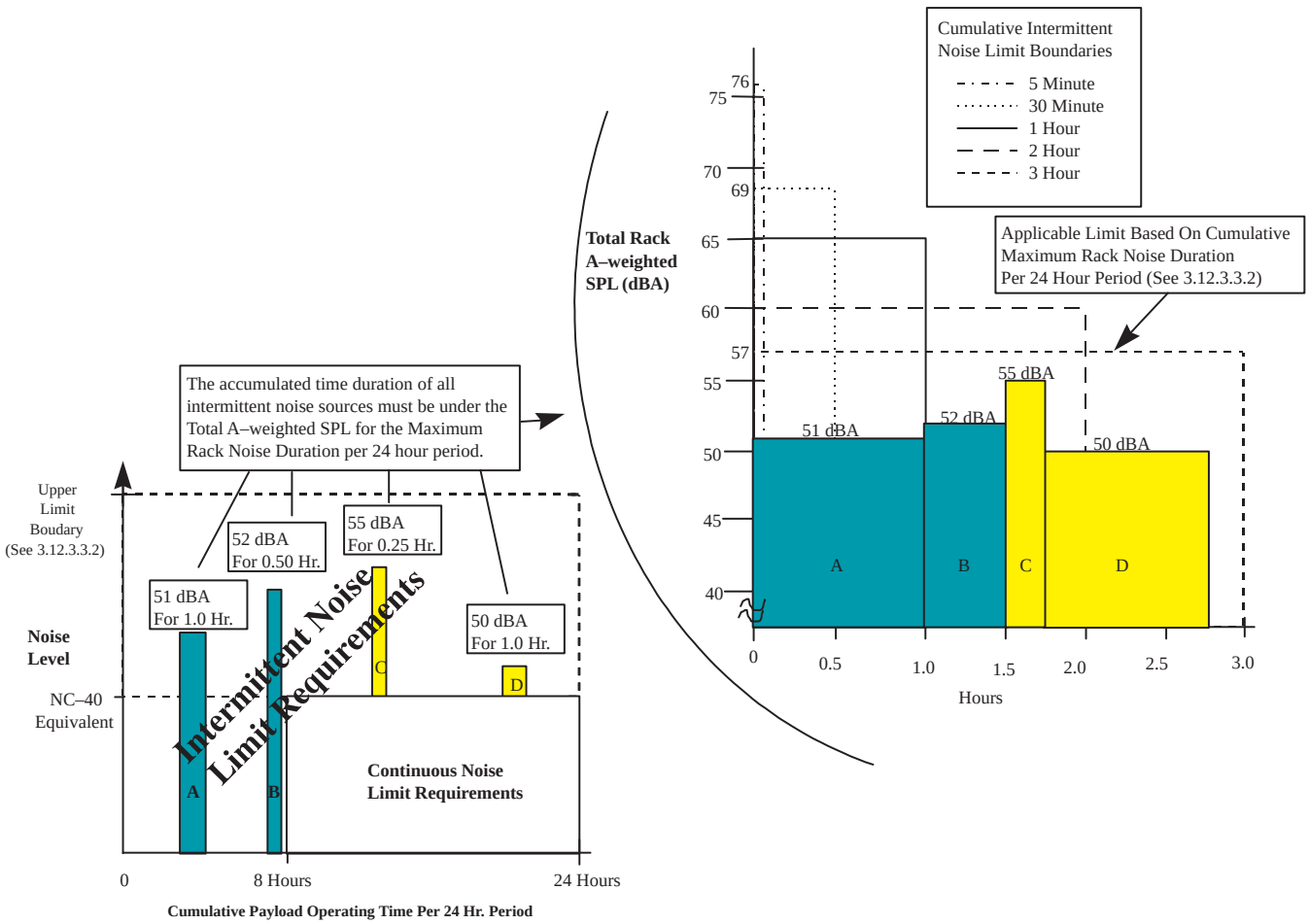

FIGURE 3.12.3.3–1 INTERMITTENT NOISE LIMIT REQUIREMENTS

The acoustic limits that will be utilized are provided in the Tables which follow. The limits apply to the integrated rack of equipment and, to any sub-rack equipment that is independently operated outside of the rack. The Integrated rack configuration includes any adjunct equipment such as payload-provided external computers, fans, etc., added in support of the rack system.

NOTE: Integrated racks unable to meet the acoustic design requirements will be required to take Sound Power measurements to process any proposed exceptions.

Any required acoustic measurements will be performed in accordance with the appropriate standards, as follows:

ISO 9614–2, Acoustics – Determination of Sound Power Levels of Noise Sources using Sound Intensity – Part 2: Measuring by Scanning, (1996).

ANSI S1.4, Specification for Sound Level Meters Amendment S1.4A–1985 ASA 47 R(1994).

ANSI S1.11, Specification for Octave-Band and Fractional-Octave-Band Analog and Digital Filters; ASA 65–1986 R(1993).

ANSI S12.12–1992, Engineering Method for the Determination of Sound Power Levels of Noise Sources using Sound Intensity ASA 104.

ANSI S12.23–1989 (R1996), Method for the Designation of Sound Power Emitted by Machinery and Equipment.

ANSI S12.31–1990 (R1996), Precision Methods for Determination of Sound Power Levels of Broad-band Noise Sources in Reverberation Rooms.

ANSI S12.32–1990 (R1996), Precision Methods for the Determination of Sound Power Levels of Discrete Frequency and Narrow-band Noise Sources in Reverberation Rooms.

ANSI S12.33–1990, Engineering Methods for the Determination of Sound Power Levels of Noise Sources in a Special Reverberation Test Room.

ANSI S12.34–1988 (R1993), Engineering Methods for the Determination Sound Power Levels of Noise Sources for Essentially Free-field Conditions over a Reflecting Plane.

ANSI–S12.35–1990 (R1996), Precision Methods for the Determination of Sound Power Levels of Noise Sources in Anechoic and Hemi-anechoic Rooms.

ANSI–S12.36–1990, Survey Methods for the Determination of Sound Power Levels of Noise Sources.

3.12.3.3.1 CONTINUOUS NOISE LIMITS

A. **Integrated Racks Whose Sub-Rack Equipment Will Not Be Changed Out** – The Continuous Noise Source (see Glossary of Terms) for an integrated rack (including any supporting adjunct active portable equipment operated outside the integrated rack that is within or interfacing with the crew habitable volume) whose sub-rack equipment will not be changed out on-orbit shall not, except in those cases when the rack meets the Intermittent Noise Source requirements specified in section 3.12.3.3.2, exceed the limits specified in Table 3.12.3.3.1–1 for all octave bands (NC–40 equivalent) when the equipment is operating in the loudest expected configuration and mode of operation that can occur on orbit under nominal crew, or hardware operation circumstances, during integrated rack setup operations, or during nominal operations where doors/panels are opened or removed. NOTE: These acoustic requirements do not apply during failure or maintenance operations.

B. **Integrated Racks Whose Sub-Rack Equipment Will Be Changed Out** – The Continuous Noise Source (see Glossary of Terms) for an integrated rack (including any supporting

adjunct active portable equipment operated outside the integrated rack that is within or interfacing with the crew habitable volume) whose sub-rack equipment will be changed out on-orbit shall not, except in those cases when the rack meets the Intermittent Noise Source requirements specified in section 3.12.3.3.2, exceed the limits specified in Table 3.12.3.3.1–1 for all octave bands (NC–40 equivalent) when the equipment is operating in the loudest expected configuration and mode of operation that can occur on orbit under nominal crew, or hardware operation circumstances, during integrated rack setup operations, or during nominal operations where doors/panels are opened or removed. NOTE: These acoustic requirements do not apply during failure or maintenance operations.

C. **Independently Operated Equipment** – Any independently operated equipment item, stowed within the rack or elsewhere, and deployed on orbit for a separate function other than that of the rack system, shall individually comply with the acoustic requirements in the Table 3.12.3.3.1–1.

TABLE 3.12.3.3.1–1 CONTINUOUS NOISE LIMITS

Rack Noise Limits Measured At 0.6 Meters Distance From The Test Article	
Frequency Band Hz	**Integrated Rack Sound Pressure Level (SPL)**
63	64
125	56
250	50
500	45
1000	41
2000	39
4000	38
8000	37

3.12.3.3.2 INTERMITTENT NOISE LIMITS

The Integrated rack (including any supporting adjunct active portable equipment operated outside the integrated rack that is within or interfacing with the crew habitable volume) Intermittent Noise Source (See Glossary of Terms) shall not exceed the Total Rack A-weighted SPL Limits during the Maximum Rack Noise Duration as specified in Table 3.12.3.3.2–1 when the equipment is operating in the loudest expected configuration and mode of operation that can occur on orbit under any planned operations. NOTE: These acoustic requirements do not apply during failure or maintenance operations.

TABLE 3.12.3.3.2–1 INTERMITTENT NOISE LIMITS

Rack Noise Limits Measured at 0.6 meters distance from the test article	
Maximum Rack Noise Duration Ü	**Total Rack A-weighted SPL (dBA)**
8 Hours	49
7 Hours	50
6 Hours	51
5 Hours	52
4 Hours	54
3 Hours	57
2 Hours	60
1 Hour	65
30 Minutes	69
15 Minutes	72
5 Minutes	76
2 Minutes	78
1 Minute	79
Not Allowed	80

The Rack Noise Duration is the total time that the rack produces intermittent noise above the NC–40 limit during a 24 hour time period. This duration is the governing factor in determining the allowable Intermittent Noise Limits. Regardless of the number of separate sources and varying durations within a rack, this cumulative duration shall be used to determine the A-weighted SPL limit in column B.

For example, if a rack produces 65 dBA for 30 minutes in a start-up and warm-up mode and then settles down to 60 dBA for a one hour period of normal data acquisition, the duration is 1.5 hours. To meet the requirement, the noise can be no greater than 60 dBA, and in this case, the rack would not meet the requirement, even though two separate payloads, one that operated at 65 dBA for 30 minutes and another that operated at 60 dBA for one hour, would be acceptable (see Figure 3.12.3.3.2–1).

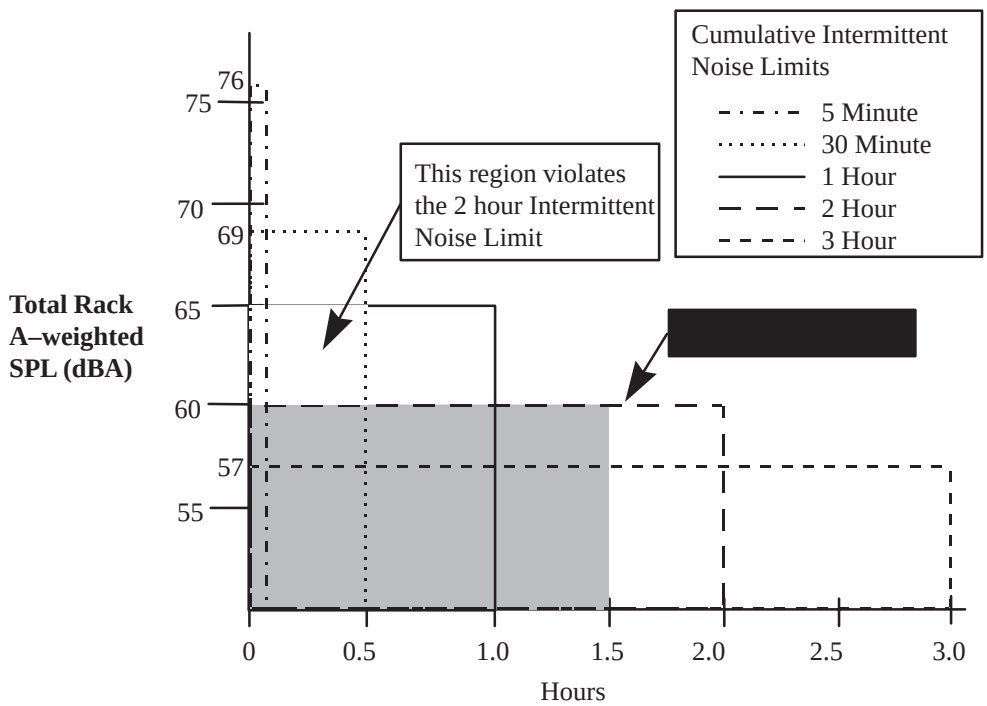

FIGURE 3.12.3.3.2–1 INTERMITTENT NOISE LIMITS

3.12.3.4 LIGHTING DESIGN

The general illumination of the space station in the aisle will be a minimum of 108 lux (10 foot candles) of white light. This illumination will be sufficient for ordinary payload operations performed in the aisle (e.g., examining dials or panels, reading procedures, transcription, tabulation, etc.).

Payloads will meet the following requirements:

A. Payload work surface specularity shall not exceed 20 percent. Paints listed in Table 3.12.3.4–1 meet this requirement.

B. Lighting levels for tasks to be performed at payload worksites shall be provided, as defined in Table 3.12.3.4–2.

C. Light sources shall be dimmable.

D. Lighting in gloveboxes, excluding spot illumination, shall not exceed a brightness ratio of 3:1.

E. Medium payload operational tasks shall utilize the ISS Portable Utility Light (PUL) specified in JSC 27199.

TABLE 3.12.3.4–1 SURFACE INTERIOR COLORS AND PAINTS

HARDWARE DESCRIPTION	COLOR	FINISH	PAINT SPECIFICATION PER FED–STD–595
Equipment Rack Utility Panel Recess	White	Semigloss	27925
Equipment Rack Utility Panel Text Characters	Black	Lusterless	37038
International Std. Payload Rack Primary Structure	Off-White	Semigloss	27722
ISPR Utility Panel Recess	White	Semigloss	27925
ISPR Utility Panel Recess Text Characters	Black	Lusterless	37038
Functional Unit Rack (Primary Structure)	Off-White	Semigloss	27722
Functional Unit Utility Panel Recess (as applicable)	White	Semigloss	27925
Functional Unit Utility Panel Recess Text Characters	Black	Lusterless	37038
Rack Front Aisle Extensions	Off-White	Semigloss	27722
Ceiling Rack Face Plates	Off-White	Semigloss	27722
Port Rack Face Plates	Off-White	Semigloss	27722
Starboard Rack Face Plates	Off-White	Semigloss	27722
Floor Rack Face Plates	Off-White	Semigloss	27722
Ceiling Rack Utility Panel Closeouts	Off-White	Semigloss	27722
Port Rack Utility Panel Closeouts	Off-White	Semigloss	27722
Starboard Rack Utility Panel Closeouts	Off-White	Semigloss	27722
Floor Rack Utility Panel Closeouts	Off-White	Semigloss	27722
Stowage Trays	Off-White	Semigloss	27722
Stowage Tray Handle Straps (any location)	Blue material	Semigloss	25102 or equiv.
Common Seat Track Interface	Clear (Anodized)	Semigloss	none
Glovebox (Aluminum or Plastic)	Medium Gray	Gloss	16329 or 16373
Glovebox (Aluminum)	White	Gloss	17925
Glovebox (Aluminum or Plastic)	Off-White	Gloss	17722
Glovebox (Aluminum)	Tan	Gloss	10475
EXPRESS Program Rack Utility Panels	Off–White	Gloss	17875

TABLE 3.12.3.4–2 PAYLOAD REQUIRED ILLUMINATION LEVELS

Type of Task	Required Lux (Foot-Candles)*
Medium payload operations (not performed in the aisle) (e.g., payload change-out and maintenance)	325 (30)
Fine payload operations (e.g., instrument repair)	1075 (100)
Medium glovebox operations (e.g., general operations, experiment set-up)	975 (90)
Fine glovebox operations (e.g., detailed operations, protein crystal growth, surgery/dissection, spot illumination)	1450 (135)

* As measured at the task site

3.12.4 STRUCTURAL/MECHANICAL INTERFACES

3.12.4.1 DELETED

3.12.4.1.1 DELETED

3.12.4.2 PAYLOAD HARDWARE MOUNTING

3.12.4.2.1 EQUIPMENT MOUNTING

Equipment items used during nominal operations and planned maintenance shall be designed, labeled, or marked to protect against improper installation.

3.12.4.2.2 DRAWERS AND HINGED PANELS

Payload ORU's which are pulled out of their installed positions for routine checkout shall be mounted on equipment drawers or on hinged panels. Such drawers or hinged panels shall remain in the "open" position without being supported by hand.

3.12.4.2.3 DELETED

3.12.4.2.4 DELETED

3.12.4.2.5 ALIGNMENT

Payload hardware having blind mate connectors shall provide guide pins or their equivalent to assist in alignment of hardware during installation.

3.12.4.2.5.1 DELETED

3.12.4.2.6 SLIDE-OUT STOPS

Limit stops shall be provided on slide or pivot mounted sub-rack hardware which is required to be pulled out of its installed positions.

3.12.4.2.7 PUSH-PULL FORCE

Payload hardware mounted into a capture-type receptacle that requires a push-pull action shall require a force less than 156 N (35 lbf) to install or remove.

3.12.4.2.8 ACCESS

Access to inspect or replace a hardware item (e.g., an ORU) which is planned to be accessed on a daily or weekly basis shall not require removal of another hardware item or more than one access cover.

3.12.4.2.8.1 COVERS

Where physical access is required, one of the following practices shall be followed, with the order of preference given.

A. Provide a sliding or hinged cap or door where debris, moisture, or other foreign materials might otherwise create a problem.

B. Provide a quick-opening cover plate if a cap will not meet stress requirements.

3.12.4.2.8.2 SELF-SUPPORTING COVERS

All access covers that are not completely removable shall be self-supporting in the open position.

3.12.4.2.8.3 DELETED

3.12.4.2.8.4 UNIQUE TOOLS

Payload provided unique tools shall meet the requirements of SSP 50005, paragraph 11.2.3.

3.12.4.3 CONNECTORS

3.12.4.3.1 ONE-HANDED OPERATION

All ORU connectors, whether operated by hand or tool, shall be designed and placed so they can be mated/demated using either hand.

3.12.4.3.2 ACCESSIBILITY

A.

(1) Nominal Operations – It shall be possible to mate/demate individual connectors without having to remove or mate/demate other connectors.

(2) Maintenance Operations – It shall be possible to mate/demate individual connectors without having to remove or mate/demate connectors on other ORUs or payloads.

B. Electrical connectors and cable installations shall permit disconnection and reconnection without damage to wiring connectors.

3.12.4.3.3 EASE OF DISCONNECT

A. Electrical connectors which are mated/demated during nominal operations shall require no more than two turns to disconnect.

B. Electrical connectors which are mated/demated during ORU replacement operations only, shall require no more than six turns to disconnect.

3.12.4.3.4 INDICATION OF PRESSURE/FLOW

Payload liquid or gas lines not equipped with quick disconnect connectors which are designed to be connected/disconnected under pressure shall be fitted with pressure/flow indicators.

3.12.4.3.5 SELF LOCKING

Payload electrical connectors shall provide a self-locking feature.

3.12.4.3.6 CONNECTOR ARRANGEMENT

A. Space between connectors and adjacent obstructions shall be a minimum of 25mm (1 inch) for IVA access

B. Connectors in a single row or staggered rows which are removed sequentially by the crew (IVA) shall provide 25mm (1inch) of clearance from other connectors and/or adjacent obstructions for 270 degrees of sweep around each connector beginning at the start of its removal/replacement sequence.

3.12.4.3.7 ARC CONTAINMENT

Electrical connector plugs shall be designed to confine/isolate the mate/demate electrical arcs or sparks.

3.12.4.3.8 CONNECTOR PROTECTION

Protection shall be provided for all demated connectors against physical damage and contamination.

3.12.4.3.9 CONNECTOR SHAPE

Integrated rack and sub-rack connectors shall use different connector shapes, sizes or keying to prevent mating connectors when lines differ in content.

3.12.4.3.10 FLUID AND GAS LINE CONNECTORS

Fluid and gas connectors that are mated and demated on-orbit shall be located and configured so that they can be fully inspected for leakage.

3.12.4.3.11 ALIGNMENT MARKS OR GUIDE PINS

A. Mating parts shall have alignment marks in a visible location during mating or guide pins (or their equivalent).

B. Deleted

3.12.4.3.12 CODING

A. Both halves of mating connectors shall display a code or identifier which is unique to that connection

B. The labels or codes on connectors shall be located so they are visible when connected or disconnected.

3.12.4.3.13 PIN IDENTIFICATION

Each pin shall be uniquely identifiable in each electrical plug and each electrical receptacle. At least every 10th pin must be labeled.

3.12.4.3.14 ORIENTATION

Grouped plugs and receptacles shall be oriented so that the aligning pins or equivalent devices are in the same relative position.

3.12.4.3.15 HOSE/CABLE RESTRAINTS

A. The integrated rack shall provide a means to restrain the loose ends of hoses and cables.

B. Conductors, bundles, or cables shall be secured by means of clamps unless they are contained in wiring ducts or cable retractors.

C. Cables should be bundled if multiple cables are running in the same direction and the bundling does not cause EMI.

D. Loose cables (longer than 0.33 meters (1 foot) shall be restrained as follows:

Length (m)	Restraint Pattern (% of length) tolerances +/– 10%)
0.33–1.00	50
1.00–2.00	33,67
2.00–3.00	20, 40, 60, 80
>3.00	at least each 0.5 meters

3.12.4.4 FASTENERS

3.12.4.4.1 NON-THREADED FASTENERS STATUS INDICATION

An indication of correct engagement (hooking, latch fastening, or proper positioning of interfacing parts) of non-threaded fasteners shall be provided.

3.12.4.4.2 MOUNTING BOLT/FASTENER SPACING

Clearance around fasteners to permit fastener hand threading (if necessary) shall be a minimum of 0.5 inches for the entire circumference of the of the bolt head and and a minimum of 1.5 inches over 180 degrees of the bolt head and provide the tool handle sweep as seen in Figure 3.12.4.4.2–2. Excepted are NSTS standard middeck lockers or payload–provided hardware with the static envelope dimensions (cross–section) as specified in Figures 3.4.2.1–1, 3.4.2.2–1 and 3.4.2.3–1 of NSTS–21000–IDD–MDK and other similar captive fastener arrangements.

FIGURE 3.12.4.4.2–1 DELETED

Opening dimensions		Task
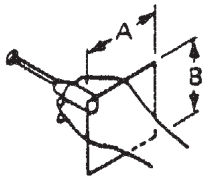	A 117 mm (4.6 in) B 107 mm (4.2 in)	Using common screw-driver with freedom to turn hand through 180°
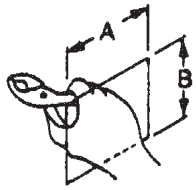	A 133 mm (5.2 in) B 115 mm (4.5 in)	Using pliers and similar tools
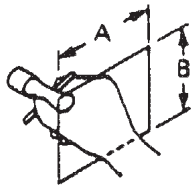	A 155 mm (6.1 in) B 135 mm (5.3 in)	Using T-handle wrench with freedom to turn wrench through 180°
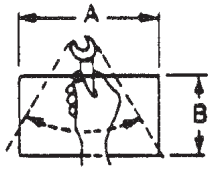	A 203 mm (8.0 in) B 135 mm (5.3 in)	Using open-end wrench with freedom to turn wrench through 62°
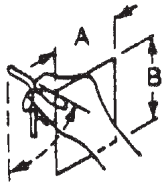	A 122 mm (4.8 in) B 155 mm (6.1 in)	Using Allen-type wrench with freedom to turn wrench through 62°

FIGURE 3.12.4.4.2–2 MINIMAL CLEARANCE FOR TOOL–OPERATED FASTENERS

3.12.4.4.3 DELETED

3.12.4.4.4 MULTIPLE FASTENERS

A. When several fasteners are used on one item they shall be of identical type.

B. Deleted.

3.12.4.4.5 CAPTIVE FASTENERS

All fasteners planned to be installed and/or removed on-orbit shall be captive when disengaged.

3.12.4.4.6 QUICK RELEASE FASTENERS

A. Quick release fasteners shall require a maximum of one complete turn to operate (quarter – turn fasteners are preferred).

B. Quick release fasteners shall be positive locking in open and closed positions.

3.12.4.4.7 THREADED FASTENERS

Only right handed threads shall be used.

3.12.4.4.8 OVER CENTER LATCHES

A. Nonself-latching – Over center latches shall include a provision to prevent undesired latch element realignment, interface, or reengagement.

B. Latch lock – Latch catches shall have locking features.

C. Latch handles – If the latch has a handle, the latch handle and latch release shall be operable by one hand.

3.12.4.4.9 WINGHEAD FASTENERS

Winghead fasteners shall fold down and be retained flush with surfaces.

3.12.4.4.10 DELETED

3.12.4.4.11 FASTENER HEAD TYPE

A. Hex type external or internal grip or combination head fasteners shall be used where on-orbit crew actuation is planned, e.g., ORU replacement.

B. If a smooth surface is required, flush or oval head internal hex grip fasteners shall be used for fastening.

C. Slotted fasteners shall not be used to carry launch loads for hard-mounted equipment. Slotted fasteners are allowed in non-structural applications (e.g., computer data connectors, stowed commercial equipment).

Note: Phillips or Torque-Set fasteners may be used where fastener installation is permanent relative to planned on-orbit operations or maintenance, or where tool-fastener interface failure can be corrected by replacement of the unit containing the affected fastener with a spare unit.

3.12.4.4.12 ONE-HANDED ACTUATION

Fasteners planned to be removed or installed on-orbit shall be designed and placed so they can be mated/demated using either hand.

3.12.4.4.13 DELETED

3.12.4.4.14 ACCESS HOLES

Covers or shields through which mounting fasteners must pass for attachment to the basic chassis of the unit shall have holes for passage of the fastener without precise alignment (and hand or necessary tool if either is required to replace).

3.12.5 CONTROLS AND DISPLAYS

3.12.5.1 CONTROLS SPACING DESIGN REQUIREMENTS

All spacing between controls and adjacent obstructions shall meet the minimum requirements as shown in Figure 3.12.5.1–1, Control Spacing Requirements for Ungloved Operation.

3.12.5.2 ACCIDENTAL ACTUATION

Requirements for reducing accidental actuation of controls are defined as follows:

3.12.5.2.1 PROTECTIVE METHODS

Payloads shall provide protection against accidental control actuation using one or more of the protective methods listed in sub–paragraphs A through G below. Infrequently used controls (i.e. those used for calibration) should be separated from frequently used controls. Leverlock switches or switch covers are strongly recommended for switches related to mission success. Switch guards may not be sufficient to prevent accidental actuation.

Note: Displays and controls used only for maintenance and adjustments, which could disrupt normal operations if activated, should be protected during normal operations, e.g., by being located separately or guarded/covered.

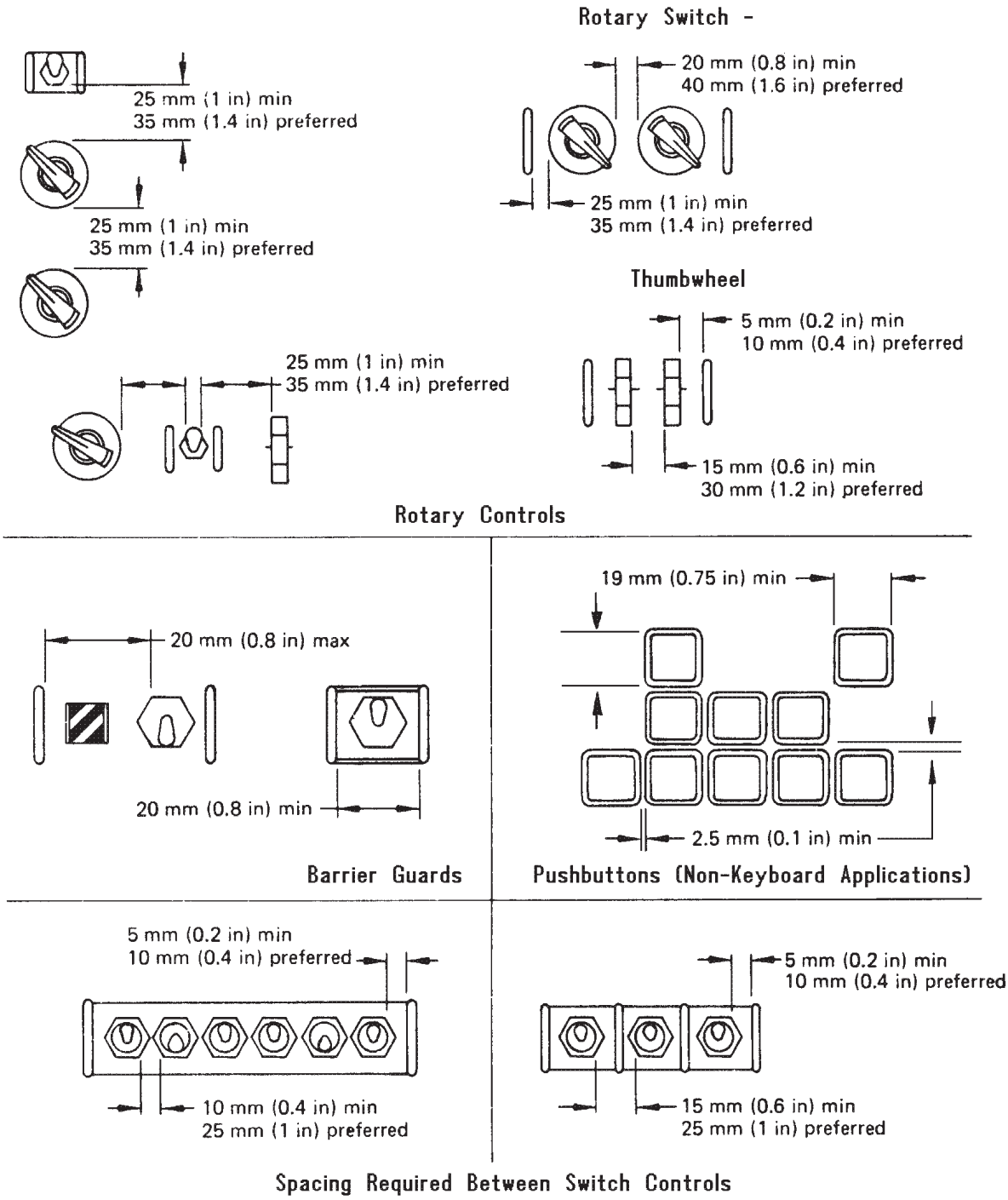

FIGURE 3.12.5.1–1 CONTROL SPACING REQUIREMENTS FOR UNGLOVED OPERATION

A. Locate and orient the controls so that the operator is not likely to strike or move them accidentally in the normal sequence of control movements.

B. Recess, shield, or otherwise surround the controls by physical barriers. The control shall be entirely contained within the envelope described by the recess or barrier.

C. Cover or guard the controls. Safety or lock wire shall not be used.

D. Cover guards when open shall not cover or obscure the protected control or adjacent controls.

E. Provide the controls with interlocks so that extra movement (e.g., lifting switch out of a locked detent position) or the prior operation of a related or locking control is required.

F. Provide the controls with resistance (i.e., viscous or coulomb friction, spring-loading, or inertia) so that definite or sustained effort is required for actuation.

G. Provide the controls with a lock to prevent the control from passing through a position without delay when strict sequential actuation is necessary (i.e., the control moved only to the next position, then delayed).

3.12.5.2.2 NONINTERFERENCE

Payload provided protective devices shall not cover or obscure other displays or controls.

3.12.5.2.3 DEAD-MAN CONTROLS

Dead-man controls are covered under NSTS 1700.7, ISS Addendum paragraphs 200.4a and 303.2.

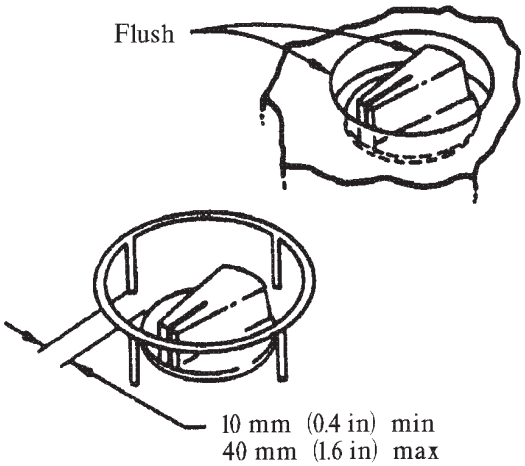

FIGURE 3.12.5.2.3–1 ROTARY SWITCH GUARD

3.12.5.2.4 BARRIER GUARDS

Barrier guard spacing shall adhere to the requirements for use with the toggle switches, rotary switches, and thumbwheels as shown in Figures 3.12.5.1–1, Control Spacing Requirements for Ungloved Operation and 3.12.5.2.3–1, Rotary Switch Guard.

3.12.5.2.5 RECESSED SWITCH PROTECTION

When a barrier guard is not used, rotary switches that control critical functions shall be recessed as shown in Figure 3.12.5.2.3–1, Rotary Switch Guard.

3.12.5.2.6 DELETED

3.12.5.2.7 POSITION INDICATION

When payload switch protective covers are used, control position shall be evident without requiring cover removal.

3.12.5.2.8 HIDDEN CONTROLS

Controls that cannot be directly viewed will be avoided. If present, hidden controls shall be guarded to protect against inadvertent actuation.

3.12.5.2.9 HAND CONTROLLERS

Hand controllers, excluding trackballs and mice, shall have a separate on/off control to prevent inadvertent actuation when the controller is not in use.

3.12.5.3 VALVE CONTROLS

Requirements for design of payload valve controls are defined as follows:

A. Low-Torque Valves – Valves requiring 1 N–m (10 in–lb) or less for operation are classified as “low-torque” valves and shall be provided with a “central pivot” type handle, 5.5 cm (2.25 in) or less in diameter. (see 3.12.5.3 D)

B. Intermediate-Torque Valves – Valves requiring between 1 and 2 N–m (10 and 20 in–lb) for operation are classified as “intermediate torque” valves and shall be provided with a “central pivot” type handle, 5.5 cm (2.25 in) or greater in diameter, or a “lever (end pivot type” handle, 7.5 cm (3 in) or greater in length.

C. High-Torque Valves – Valves requiring 2 N–m (20 in–lb) or more for operation are classified as “high-torque” valves and shall be provided “lever type” handles greater than 7.5 cm (3 in) or greater in length.

D. Handle Dimensions – Valve handles shall adhere to the clearances and dimensions illustrated in Figures 3.12.5.3–1, Valve Handle-Central Pivot Type and 3.12.5.3–2, Valve Handle-Lever Type.

E. Rotary Valve Controls – Rotary valve controls shall open the valve with a counter-clockwise motion.

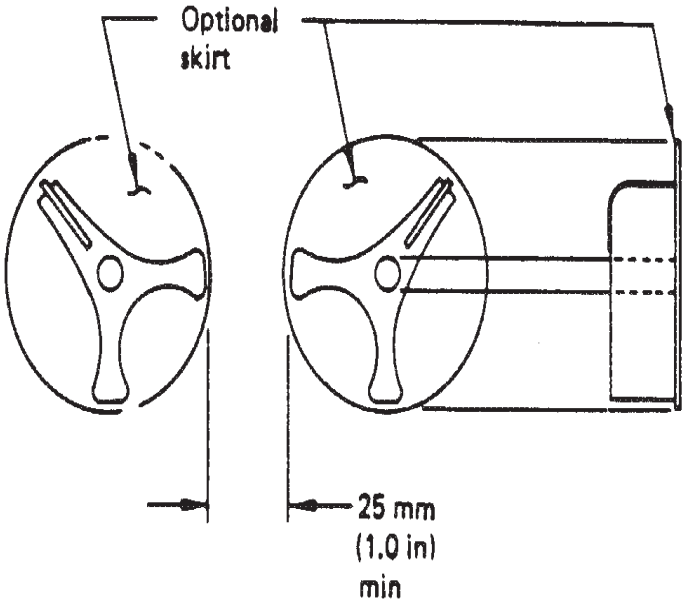

FIGURE 3.12.5.3–1 VALVE HANDLE - CENTRAL PIVOT TYPE

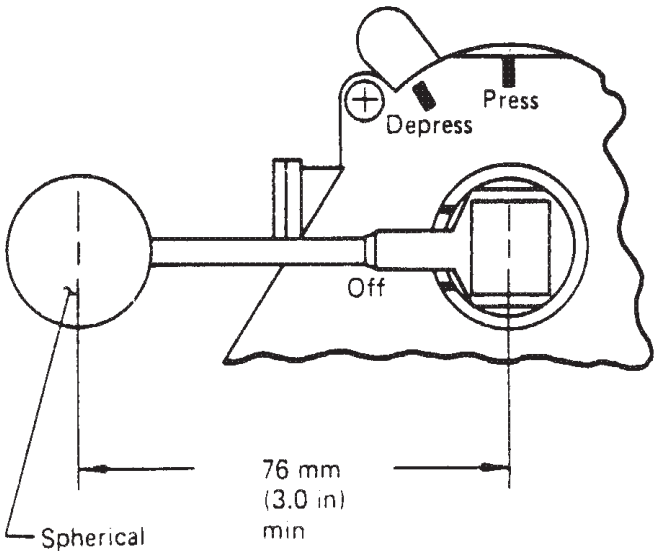

FIGURE 3.12.5.3–2 VALVE HANDLE – LEVER TYPE

3.12.5.4 TOGGLE SWITCHES

Dimensions for a standard toggle switch shall conform to the values presented in Figure 3.12.5.4–1, Toggle Switches.

3.12.6 RESTRAINTS AND MOBILITY AIDS

The integrated rack shall be designed such that all installation, operation, and maintenance can be performed using standard crew restraints, mobility aids, and interfaces as defined in SSP 30257:004.

3.12.6.1 STOWAGE DRAWER CONTENTS RESTRAINTS

A. Payload drawer/tray contents shall be restrained in such a way that the items do not float when the drawer/tray is opened or closed.

B. Payload drawer/tray contents shall be restrained in a way such that the items do not jam the drawer when the drawer is opened or closed.

C. Drawer/tray contents shall be restrained in such a way that the contents can be removed/replaced without using a tool.

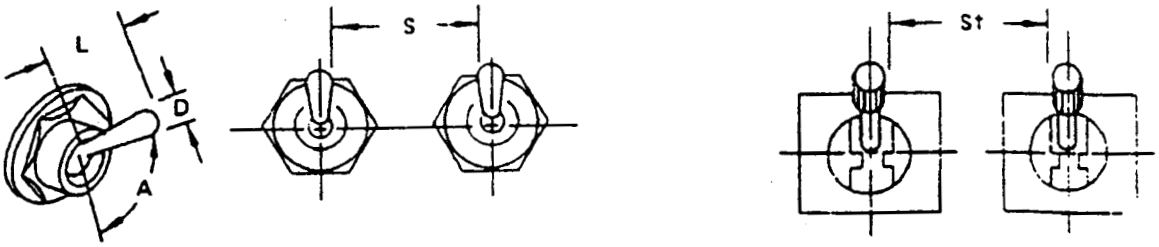

	Dimensions		Resistance	
	L Arm length	D Control tip	Small switch	Large switch
Minimum	13 mm (1/2 in)	3mm (1/8 in)	2.8 N (10 oz)	2.8 N (10 oz)
Maximum	50 mm (2 in)	25 mm (1 in)	4.5 N (16 oz)	11 N (40 oz)

	Displacement between positions	
	2 position	A 3 position
Minimum	30°	17°
Maximum	80°	40°
Desired		25°

	Separation			
	Single finger operation	†	S Single finger sequential operation	Simultaneous operation by different fingers
Minimum	19 mm (3/4 in)	25 mm (1 in)	13 mm (1/2 in)	16 mm (5/8 in)
Optimum	50 mm (2 in)	50 mm (2 in)	25 mm (1 in)	19 mm (3/4 in)

† Using a lever lock toggle switch MSIS-239

Reference: 2, page 93

FIGURE 3.12.5.4–1 TOGGLE SWITCHES

3.12.6.2 STOWAGE AND EQUIPMENT DRAWERS/TRAYS

A. All latches, handles, and operating mechanisms shall be designed to be latched/unlatched and opened/closed with one hand by the 95th percentile American male to the 5th percentile female.

B. The design of latches shall be such that their status (locked/unlocked) can be determined through visual inspection.

3.12.6.3 CAPTIVE PARTS

Payloads and payload equipment shall be designed in such a manner to ensure that all unrestrained parts (e.g., locking pins, knobs, handles, lens covers, access plates, or similar devices) that may be temporarily removed on orbit will be tethered or otherwise held captive.

3.12.6.4 HANDLE AND GRASP AREA DESIGN REQUIREMENTS

3.12.6.4.1 HANDLES AND RESTRAINTS

All removable or portable items which cannot be grasped with one hand, as per Table 3.12.6.4.2–1, shall be provided with handles or other suitable means of grasping, tethering, carrying and restraining.

3.12.6.4.2 DELETED

3.12.6.4.3 HANDLE LOCATION/FRONT ACCESS

Handles and grasp areas shall be placed on the accessible surface of a payload item consistent with the removal direction.

3.12.6.4.4 HANDLE DIMENSIONS

IVA handles for movable or portable units shall be designed in accordance with the minimum applicable dimensions in Figure 3.12.6.4.4–1.

Illustration	Type of handle	Dimensions in mm (in inches) (Bare hand) X	Y	Z
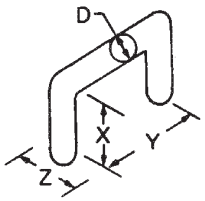	Two-finger bar One-hand bar Two-hand bar	32 (1–1/4) 48 (1–7/8) 48 (1–7/8)	65 (2–1/2) 111 (4–3/8) 215 (8–1/2)	75 (3) 75 (3) 75 (3)
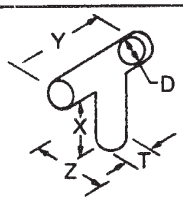	T-bar	38 (1–1/2)	100 (4)	75 (3)
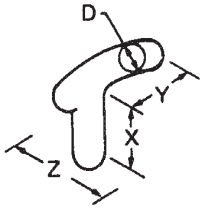	J-bar	50 (2)	100 (4)	75 (3)
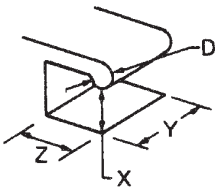	Two-finger recess One-hand recess	32 (1–1/4) 50 (2)	65 (2–1/2) 110 (4–1/4)	75 (3) 90 (3–1/2)
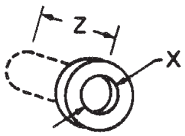	Finger-tip recess One-finger recess	19 (3/4) 32 (1–1/4)	– –	13 (1/2) 50 (2)

Curvature of handle or edge (DOES NOT PRECLUDE USE OF OVAL HANDLES)	Weight of Item	Minimum diameter	
	Up to 6.8 kg (up to 15 lbs)	D = 6 mm (1/4 in)	Gripping efficiency is best if finger can curl around handle or edge to any angle of 2/3 π rad (120°) or more
	6.8 to 9.0 kg (15 to 20 lbs)	D = 13 mm (1/2 in)	
	9.0 to 18 kg (20 to 40 lbs)	D = 19 mm (3/4 in)	
	Over 18 kg (over 40 lbs)	D = 25 mm (1 in)	
	T-bar post	T = 13 mm (1/2 in)	

FIGURE 3.12.6.4.4–1 MINIMUM IVA HANDLE DIMENSIONS FOR IVA APPLICATIONS

3.12.6.4.5 NON-FIXED HANDLES DESIGN REQUIREMENTS

Hinged, foldout, or attachable (i.e., non-fixed) handles will comply with the following:

A. Nonfixed handles shall have a stop position for holding the handle perpendicular to the surface on which it is mounted.

B. Nonfixed handles shall be capable of being placed in the use position by one hand and shall be capable of being removed or stowed with one hand.

C. Attachable/removable handles shall incorporate tactile and/or visual indication of locked/unlocked status.

3.12.7 IDENTIFICATION LABELING

Integrated racks, all (installed in the rack or separately) sub–rack elements, loose equipment, stowage trays, consumables, ORUs, crew accessible connectors and cables, switches, indicators, and controls shall be labeled. Labels are markings of any form (including IMS bar cards) such as decals and placards, which can be adhered, “silk screened”, engraved, or otherwise applied directly onto the hardware. Appendix C provides instructions for label and decal design and approval.

3.12.7.1 DELETED

3.12.7.2 DELETED

3.12.7.3 DELETED

3.12.7.4 DELETED

3.12.7.5 DELETED

3.12.7.5.1 DELETED

3.12.7.5.2 DELETED

A. Deleted

B. Deleted

3.12.7.5.3 DELETED

A. Deleted

B. Deleted

(1) Deleted

(2) Deleted

(3) Deleted

C. Deleted

D. Deleted

(1) Deleted

(2) Deleted

3.12.7.5.4 DELETED

A. Deleted

B. Deleted

C. Deleted

D. Deleted

E. Deleted

3.12.7.5.5 DELETED

3.12.7.5.6 DELETED

A. Deleted

B. Deleted

C. Deleted

(1) Deleted

D. Deleted

(1) Deleted

(2) Deleted

3.12.7.5.7 DELETED

3.12.7.5.7.1 DELETED

A. Deleted

B. Deleted

C. Deleted

(1) Deleted

3.12.7.5.8 DELETED

3.12.7.5.9 DELETED

A. Deleted

B. Deleted

C. Deleted

D. Deleted

(1) Deleted

(2) Deleted

(3) Deleted

3.12.7.5.10 DELETED

A. Deleted

B. Deleted

C. Deleted

D. Deleted

3.12.7.5.11 DELETED

A. Deleted

B. Deleted

C. Deleted

(1) Deleted

(2) Deleted

(3) Deleted

(4) Deleted

(5) Deleted

(6) Deleted

(7) Deleted

(8) Deleted

D. Deleted

(1) Deleted

(2) Deleted

(3) Deleted

(4) Deleted

(5) Deleted

(6) Deleted

(7) Deleted

E. Deleted

(1) Deleted

(2) Deleted

F. Deleted.

3.12.7.5.12 DELETED

A. Deleted

B. Deleted

C. Deleted

3.12.7.5.13 DELETED

A. Deleted

B. Deleted

3.12.7.6 DELETED

A. Deleted

B. Deleted

C. Deleted

3.12.8 COLOR

Payloads shall select interior colors in accordance with the requirements in Table 3.12.3.4–1.

3.12.9 CREW SAFETY

3.12.9.1 ELECTRICAL HAZARDS

Electrical equipment other than bioinstrumentation equipment will incorporate the following controls as specified below:

A. If the exposure condition is below the threshold for shock (i.e., below maximum leakage current and voltage requirements as defined within this section), no controls are required. Non–patient equipment with internal voltages not exceeding 30 volts rms or dc nominal (32 volts rms or dc maximum) will contain potentials below the threshold for electrical shock.

B. If the exposure condition exceed the threshold for shock, but is below the threshold of the let-go current profile (critical hazard) as defined in Table 3.2.5.4–1, two independent controls (e.g., a safety (green) wire, bonding, insulation, leakage current levels below maximum requirements) shall be provided such that no single failure, event, or environment can eliminate more than one control.

C. If the exposure condition exceeds both the threshold for shock and the threshold of the let-go current profile (catastrophic hazardous events) as defined in Table 3.2.5.4–1, three independent controls shall be provided such that no combination of two failures, events or environments can eliminate more than two controls.

D. If two dependent controls are provided, the physiological effect that a crew member experiences as a result of the combinations of the highest internal voltage applied to or generated within the equipment and the frequency and wave form associated with a worst case credible failure shall be below the threshold of the let-go current profile as defined in Table 3.2.5.4–1.

E. If it cannot be domonstrated that the hazard meets the conditions of paragraph A, B, or C above, three independent hazard controls shall be provided such that no combination of two failures, events or environments can eliminate more than two controls.

3.12.9.1.1 MISMATCHED

The design of electrical connectors shall make it impossible to inadvertently reverse a connection or mate the wrong connectors if a hazardous condition can be created. Payload and on-orbit support equipment, wire harnesses, and connectors shall be designed such that no blind connections or disconnections must be made during payload installation, operation, removal, or maintenance on orbit unless the design includes scoop proof connectors or other protective features (NSTS 1700.7, ISS Addendum, paragraph 221).

For payload equipment, for which mismating or cross-connection may damage ISS-provided equipment, plugs, and receptacles (connectors), shall be selected and applied such that they

cannot be mismatched or cross-connected in the intended system as well as adjacent systems. Although identification markings or labels are required, the use of identification alone is not sufficient to preclude mismating.

For all other payload connections, combinations of identification, keying and clocking, and equipment test and checkout procedures shall be employed at the payload's discretion to minimize equipment risk while maximizing on-orbit operability.

3.12.9.1.2 DELETED

3.12.9.1.3 DELETED

3.12.9.1.4 OVERLOAD PROTECTION

3.12.9.1.4.1 DEVICE ACCESSIBILITY

An overload protective device shall not be accessible without opening a door or cover, except that an operating handle or operating button of a circuit breaker, the cap of an extractor-type fuse holder, and similar parts may project outside the enclosure.

3.12.9.1.4.2 EXTRACTOR –TYPE FUSE HOLDER

The design of the extractor-type fuse holder shall be such that the fuse is extracted when the cap is removed.

3.12.9.1.4.3 OVERLOAD PROTECTION LOCATION

Overload protection (fuses and circuit breakers) intended to be manually replaced or physically reset on-orbit shall be located where they can be seen and replaced or reset without removing other components.

3.12.9.1.4.4 OVERLOAD PROTECTION IDENTIFICATION

Each overload protector (fuse or circuit breaker) intended to be manually replaced or physically reset on-orbit shall be readily identified or keyed for its proper value.

3.12.9.1.4.5 AUTOMATIC RESTART PROTECTION

Controls shall be employed that prevent automatic restarting after an overload-initiated shutdown.

3.12.9.1.5 DELETED

3.12.9.1.5.1 DELETED

3.12.9.2 SHARP EDGES AND CORNERS PROTECTION

Payload design within a pressurized module shall protect crewmembers from sharp edges and corners during all crew operations in accordance with NSTS 1700.7, ISS Addendum, paragraph 222.1.

3.12.9.3 HOLES

Holes that are round or slotted in the range of 10.0 to 25.0 mm (0.4 to 1.0 in.) shall be covered.

3.12.9.4 LATCHES

Latches that pivot, retract, or flex so that a gap of less than 35 mm (1.4) exists shall be designed to prevent entrapment of a crewmember's appendage.

3.12.9.5 SCREWS AND BOLTS

Threaded ends of screws and bolts accessible by the crew and extending more than 3.0 mm (0.12 in) shall be capped to protect against sharp threads.

3.12.9.6 SECURING PINS

Securing pins shall be designed to prevent their inadvertently backing out above the handhold surface.

3.12.9.7 LEVERS, CRANKS, HOOKS, AND CONTROLS

Levers, cranks, hooks, and controls shall not be located where they can pinch, snag, or cut the crewmembers or their clothing.

3.12.9.8 BURRS

Exposed surfaces shall be free of burrs.

3.12.9.9 LOCKING WIRES

A. Safety wires shall not be used on fasteners which must be unfastened for on-orbit removal or replacement.

B. All fracture-critical fasteners as defined in SSP 52005 (paragraph 5.6, Fastener Requirements, and Appendix B, Glossary of Terms), which must be unfastened for on-orbit removal or replacement shall be safety cabled or cotter pinned.

3.12.9.10 AUDIO DEVICES (DISPLAYS)

A. The design of audio devices (displays) and circuits shall protect against false alarms.

B. Deleted.

C. All audio device (displays) shall be equipped with circuit test devices or other means of operability testing.

D. An interlocked, manual disable shall be provided if there is any failure mode which can result in a sustained activation of an audio device (display).

3.12.9.11 DELETED

3.12.9.12 EGRESS

All payload egress requirements shall be in accordance with 1700.7, ISS Addendum, paragraph 205.

3.12.10 PAYLOAD IN-FLIGHT MAINTENANCE

Payloads shall be designed to be maintainable using Space Station provided on-board tools. A list of available tools on-orbit are defined in the Payloads Accommodations Handbook.

3.12.11 DELETED

(This Page Intentionally Left Blank)

4.0 VERIFICATION

This section provides the complete set of verification requirements necessary to ensure compliance with the interface and design requirements contained in section 3. The verification requirements in this section shall be complied with by all U.S. provided integrated racks and all International Partner provided integrated racks that operate in the US Laboratory module or Centrifuge Accommodations Module (CAM). These requirements, combined with the formats and guidelines contained in the Generic Payload Verification Plan form the basis for the development of a unique Payload Verification Plan (PVP).

4.1 RESPONSIBILITIES

The Rack Integrator is responsible for development and implementation of a unique Payload Verification Plan for the integrated rack. The Rack Integrator is also responsible for allocating and tracing the integrated rack level verification requirements into sub-rack payload or equipment verification plans. The Rack Integrator is also responsible for providing certification of compliance for all applicable verification requirements in this document. Applicable requirements are identified in the Traceability Matrices in the unique Payload Hardware and Software ICDs, SSP 57001 and SSP 57002 respectively. The Rack Integrator is also responsible for providing all data/test results required in this section. The ISS is responsible for review and approval of the Unique ICDs and PVPs.

4.2 VERIFICATION METHODS

The following verification methods are specified in this section:

A. INSPECTION – Inspection is a physical measurement or visual evaluation of equipment and associated documentation. Inspection is used to verify construction features, drawing compliance, workmanship, and physical condition.

B. ANALYSIS – Analysis is the technical evaluation process of using techniques and tools such as mathematical models and computer simulation, historical/design/test data, and other quantitative assessments to calculate characteristics and verify specification compliance. Analysis is used to verify requirements compliance where established techniques are adequate to yield confidence or where testing is impractical.

C. DEMONSTRATION – Demonstration is the qualitative determination of compliance with requirements by observation during actual operation or simulation under preplanned conditions and guidelines.

D. TEST – Test is actual operation of equipment, normally instrumented, under simulated or flight equivalent conditions or the subjection of parts or equipment to specified environments to measure and record responses in a quantitative manner.

4.3 INTERFACE VERIFICATION METHODS

4.3.1 STRUCTURAL/MECHANICAL AND MICROGRAVITY AND STOWAGE INTERFACE REQUIREMENTS

4.3.1.1 STRUCTURAL/MECHANICAL

NVR

4.3.1.1.1 GSE INTERFACES

A. Interface compatibility to KSC GSE shall be verified by inspection of the integrated rack design drawings. Verification shall be considered successful when inspection of the drawing shows the interface is compatible with the drawings in SSP 41017. The NASA provided 683–50243–4 ISPR structure is assumed to meet these interfaces, provided that the integrated rack hardware does not exceed the static envelope requirement.

B. Integrated rack interfaces with the RSC shall be verified by a fit check demonstration. The demonstration shall be considered successful when it is shown that the rack can be successfully connected to the RSC. The NASA provided 683–50243–4ISPR structure is assumed to meet these interfaces, provided that the integrated rack hardware does not exceed the static envelope requirement.

C. Rack compatibility with the RHA shall be verified by a fit check demonstration. The demonstration shall be considered successful when it is shown that the rack can be successfully connected to the RHA. The NASA provided 683–50243–4ISPR structure is assumed to meet these interfaces, provided that the integrated rack hardware does not exceed the static envelope requirement.

D. Ground transportation acceleration limits shall be verified by test and analysis. The test and analysis shall be considered successful when the test provides a measurement of the maximum accelerations encountered during shipment in the 3 orthogonal rack axes and an analysis shows that these accelerations do not exceed 80% of the flight accelerations.

4.3.1.1.2 MPLM INTERFACES

A. Structural attach point compatibility shall be verified by inspection of the rack drawings and comparison with the table referenced in SSP 41017. The NASA provided 683–50243–4 ISPR structure is assumed to meet these interfaces.

B. An analysis shall be conducted which determines the maximum delta pressure from within to outside the integrated rack and shows that the integrated rack maintains positive margins of safety (delta pressure limited to 3.5 kPa (0.5 psi)). Verification shall be considered

successful when the analysis shows that 3.5 kPa (0.5 psi) delta pressure is not exceeded. Verification may be by inspection of integrated rack design drawings for NASA provided 683–50243–4 ISPRs with intact and unblocked pressure relief valves).

C. Deleted.

D. Deleted.

E. An analysis shall be conducted using the referenced acceleration data and calculating the interface attach point loads via Finite Element Modeling (FEM). The analysis shall be considered successful when the FEM is approved by the ISS Program and it calculates attach point loads that do not exceed the MPLM allowable limits. A coupled loads analysis will be conducted by the ISS Program using the FEM provided to ensure that MPLM allowables are not exceeded when coupled loads are taken into account.

4.3.1.1.2.1 MPLM LATE / EARLY ACCESS REQUIREMENTS

The Late / Early Access cargo weight shall be verified by test. The verification shall be considered successful when the cargo (with GSE) weight does not exceed 250 lbs.

4.3.1.1.2.1.1 MPLM LATE ACCESS ENVELOPE (KSC)

A. The late access cargo dimension shall be verified by inspection. The verification shall be considered successful when it is shown by measurement that the cargo (with GSE) meets the late access hatch envelope identified in Figure 3.1.1.2.1.1–1.

B. The late access cargo dimension shall be verified by inspection. The verification shall be considered successful when it is shown by measurement that the cargo (with GSE) meets the late access hoist hook interface identified in Figure 3.1.1.2.1.1–2.

C. The late access cargo interface dimension shall be verified by inspection. The verification shall be considered successful when it is shown by measurement that the cargo (with GSE) meets the late access monorail hook hoist interface identified in Figure 3.1.1.2.1.1–3.

4.3.1.1.2.1.2 MPLM EARLY ACCESS ENVELOPES (KSC AND DFRC)

A. The early access cargo dimension shall be verified by inspection. The verification shall be considered successful when it is shown by measurement that the cargo (with GSE) meets the early access ODS envelope identified in Figure 3.1.1.2.1.2–1.

B. The early access cargo interface dimension shall be verified by inspection. The verification shall be considered successful when it is shown by measurement that the cargo (with GSE) meets the early access DEAP monorail interface identified in Figure 3.1.1.2.1.2–2.

4.3.1.1.3 LOADS REQUIREMENTS

A. An analysis shall be conducted which uses the referenced acceleration data and determines integrated rack structure loads via Finite Element Modeling (FEM). The analysis shall be considered successful when the FEM is approved by the ISS Program and the model determines integrated rack structure loads that maintain positive margins of safety, based upon the rack structure allowables identified in SSP 57007 Rack Integrator's Handbook.

B. An analysis shall be conducted to verify that integrated racks will maintain positive margins of safety during a transient or continuous load of 0.2 Gs.

C. The integrated rack design drawings shall be inspected to ensure that hardware is provided for umbilical restraint.

D. An analysis shall be performed to show that payload equipment exposed to the crew translation path maintains a positive margin of safety when exposed to the crew induced loads as defined in paragraph 3.1.1.3D. The verification shall be considered successful when the analysis shows positive margins exist for yield and ultimate loads for utility lines and for ultimate loads for all other exposed equipment.

E. An analysis shall be performed to show that the components mounted to U.S. ISPR posts shall maintains positive margins of safety for the MPLM launch random vibration environment as defined in paragraph 3.1.1.3. This analysis shall follow the guidelines provided in SSP 52005 paragraphs 4.1.2 and 4.1.5. The verification shall be considered successful when the analysis shows that components mounted to U.S. ISPR posts maintain positive margins of safety.

F. An analysis shall be performed to show that the components mounted to the ISPR rack maintain positive margins of safety after exposure to the design load factors for launch and landing environments as defined in paragraph 3.1.1.3. This analysis shall follow the guidelines provided in SSP 52005 paragraphs 4.1.2 and 4.1.3. The verification shall be considered successful when the coupled loads analysis shows that the components mounted to ISPR maintain positive margins of safety.

4.3.1.1.4 RACK REQUIREMENTS

A. The integrated rack weight requirement shall be verified by a demonstration involving measuring the weight of the integrated rack on the ground prior to launch and an analysis that accounts for attached GSE and any changes during on-orbit operations prior to return of the payload. Verification shall be considered successful when the weight is measured to an accuracy of 2.3 kg (5 lbs) (TBC) and is less than the specified maximum weight.

B. An analysis shall be conducted which determines the maximum delta pressure from within to outside the integrated rack and shows that the integrated rack maintains positive margins of safety (delta pressure limited to 3.5 kPa (0.5 psi)). Verification shall be considered

successful when the analysis shows that 3.5 kPa (0.5 psi) delta pressure is not exceeded. Verification may be by inspection of integrated rack design drawings for NASA provided 683–50243–4 ISPRs with intact and unblocked pressure relief valves).

C. An analysis shall be conducted using the guidelines provided in SSP 52005 appendix C.1.2.2. The verification shall be considered successful when the analysis shows that integrated rack meets the frequency requirement specified.

D. Information – no verification necessary.

E. Verification shall be by inspection of the umbilical routing drawing to ensure that the keepout zone is provided. The verification shall be considered successful when the inspection shows that the envelope is provided or analysis shows that the umbilicals can be moved out of the envelope without exceeding any umbilical bend radii requirements.

F. An analysis shall be conducted to determine the clearance dimensions of the window hardware with the integrated rack hardware. The verification shall be considered successful when the analysis indicates a positive clearance.

G. Deleted.

H. Deleted.

I. An analysis shall be conducted using integrated rack and module data to evaluate the maximum rotation angle. The verification shall be considered successful when the rotation angle is calculated to be at least 80 degrees.

J. Deleted

K. An analysis shall be conducted which determines the maximum delta pressure from within to outside the integrated rack during PFE discharge and shows that the integrated rack maintains positive margins of safety (delta pressure limited to 3.5 kPa (0.5 psi) and rack equipment maintains positive margins of safety. Verification shall be considered successful when the analysis shows that the structures maintain positive margins.

L. Verification of rack positional and crew restraints at rotation angles shall be by analysis. The analysis shall show the use of restraints to maintain the rack in the position required for payload operations and maintenance. Verification shall be considered successful when the analysis shows that the ISS provided hardware can secure the rack in the required rotation positions.

4.3.1.1.4.1 LAB WINDOW RACK LOCATION REQUIREMENTS

A. Verification that a protective cover is provided that prevents contact with the lab window surface shall be by analysis. An analysis shall be performed to determine whether or not the

rack provided protective cover can withstand loads as specified in 3.1.1.3.D, cabinets and any other exposed equipment. Verification shall be considered successful when the analysis shows the cover can withstand the loads specified in 3.1.1.3.D, cabinets and any other exposed equipment.

B. Verification that integrated racks at the lab window location provide a keep–out zone as specified in SSP 57001, Figure 3.1.1.4–1 shall be by inspection. An inspection shall determine whether or not the integrated rack provides keep–out zones as specified in SSP 57001, figure 3.1.1.4–1. Verification shall be considered successful when the inspection shows the integrated rack provides a keep–out zone as specified in SP 57001, Figure 3.1.1.4–1.

C. Verification that the integrated rack at the lab window location provide a barrier between the Lab pressure wall and the integrated rack shall be by analysis. An analysis shall determine whether or not a barrier is provided by the integrated rack that would prevent airflow and debris from leaving/entering the integrated rack. Verification shall be considered successful when the analysis shows a barrier is provided that would prevent airflow and debris from entering/leaving the rack between the back of the rack and the pressure wall.

4.3.1.1.5 SAFETY CRITICAL STRUCTURES REQUIREMENTS

A. Verification shall be in accordance with the requirements specified in SSP 52005.

B. Deleted

C. Deleted

D. Deleted

4.3.1.1.6 CONNECTOR AND UMBILICAL PHYSICAL MATE

4.3.1.1.6.1 CONNECTOR PHYSICAL MATE

Verification that the integrated rack connector physically mates with the corresponding module connector shall be by demonstration. The demonstration shall use a module connector with the part number specified in Table 3.1.1.6.1–1 to verify that the connectors physically mate. The verification shall be considered successful when the demonstration shows the integrated rack connector physically mates with its corresponding module connector.

4.3.1.1.6.2 UMBILICAL PHYSICAL MATE

A demonstration shall be conducted using the Payload Rack Checkout Unit (PRCU) or equivalent to show that the umbilicals can successfully reach their intended connector and the connectors are observed in a fully mated condition.

4.3.1.1.7 ON ORBIT PAYLOAD PROTRUSIONS

A. An inspection shall be performed to determine that on–orbit protrusions do not extend laterally across the edges of the rack or pass between racks. The inspection shall be of the hardware or the as built drawings. The verification shall be considered successful when the inspection shows that no on–orbit protrusions extends extend laterally across the edges of the rack or pass between racks.

B. A demonstration shall be performed to show that integrated rack hardware does not prevent attachment of RMA on the seat track. The demonstration shall be on the hardware or a flight like equivalent. The verification shall be considered successful when the demonstration shows that integrated rack hardware does not prevent attachment of RMA on the seat track.

4.3.1.1.7.1 ON–ORBIT PERMANENT PROTRUSIONS

An inspection of the integrated rack shall be conducted to determine that there are no permanent protrusions. The inspection shall be of the hardware or the as built drawings. The verification shall be considered successful when the inspection shows that there are no permanent protrusions.

4.3.1.1.7.2 ON–ORBIT SEMI–PERMANENT PROTRUSIONS

A. An inspection of the integrated rack shall be conducted to determine SIR and ISIS drawer handles remain within the envelope shown in Figure 3.1.1.7.2–1. The inspection shall be of the hardware or the as built drawings. The verification shall be considered successful when the inspection shows that all SIR and ISIS drawer handles remain within the envelope shown in Figure 3.1.1.7.2–1.

B. Verification of the other on–orbit semi–permanent protrusions, including knobs, switches, guards, quick–disconnect fittings, etc., of the integrated rack shall be performed by inspection. The inspection shall be of the as built drawings or hardware. Verification shall be considered successful when the inspection shows that all on–orbit semi–permanent protrusions including knobs, switches, guards, quick–disconnect fittings, etc., are limited to a total of 500 square inches within the envelope shown in Figure 3.1.1.7.2.2

C. Verification that the on–orbit semi–permanent protrusions are removable with hand operations and/or standard IVA tools shall be performed by demonstration. The demonstration shall be performed on the hardware. The verification shall be considered successful when the on–orbit semi–permanent protrusion can be removed with hand operations and/or standard IVA tools.

4.3.1.1.7.3 ON–ORBIT TEMPORARY PROTRUSIONS

A. An inspection of the integrated rack shall be conducted to determine that all on–orbit temporary protrusions remain within the envelope shown in Figure 3.1.1.7.3–1. The inspection shall be of the hardware or the as built drawings. The verification shall be considered successful when the inspection shows that all on–orbit temporary protrusions remain within the envelope shown in Figure 3.1.1.7.3–1.

B. Verification that the on–orbit temporary protrusions have been designed such that they can be eliminated or returned to their stowed configuration using hand operations and/or standard IVA tools within 10 minutes shall be performed by demonstration. The demonstration shall be performed on the hardware or a flight like equivalent. The verification shall be considered successful when the on–orbit temporary protrusions have been designed such that they can be eliminated or returned to their stowed configuration using hand operations and/or standard IVA tools within 10 minutes. To simulate on–orbit conditions, assume the ground based protrusion removal require half the time of on–orbit protrusion removal and that the tools are readily available.

4.3.1.1.7.4 ON–ORBIT MOMENTARY PROTRUSIONS

Verification of the on–orbit momentary protrusions, which includes drawer/door/cover, shall be by demonstration. The demonstration shall be performed on the hardware or a flight like equivalent. The verification shall be considered successful when the demonstration shows that the on–orbit momentary protrusion can be eliminated within the integrated rack within 30 seconds.

4.3.1.1.7.5 ON–ORBIT PROTRUSIONS FOR KEEP ALIVE PAYLOADS

An inspection of the Habitat Holding Racks, Advances Animal Habitat, Aquatic Habitat, Cell Culture Unit, Egg Incubator, Insect Habitat, Plant Research Unit, Incubator, Refrigerated Centrifuge shall be conducted to determine that the mated low temperature fluid line connectors and associated connection hardware remain within the envelope shown in Figure 3.1.1.7.5–2. The inspection shall be of the hardware or the as built drawings. The verification shall be considered successful when the inspection shows that the mated low temperature fluid line connectors and associated connection hardware are limited to no more than 100 square inches within the envelope shown in Figure 3.1.1.7.5–2.

An inspection of the Habitat Holding Racks, Advanced Animal Habitat, Aquatic Habitat, Cell Culture Unit, Egg Incubator, Insect Habitat, Plant Research Unit, Incubator, Refrigerated Centrifuge shall be conducted to determine that the air filters and low temperature fluid lines remain within the envelope shown in Figure 3.1.1.7.5–3. The inspection shall be of the hardware or the as built drawings. The verification shall be considered successful when the inspection shows that the air filters and low temperature fluid lines are limited to no more than 900 square inches within the envelope shown in Figure 3.1.1.7.5–3.

4.3.1.2 MICROGRAVITY

4.3.1.2.1 QUASI-STEADY REQUIREMENTS

A. **(TBD #11)**

B. **(TBD #12)**

4.3.1.2.2 VIBRATORY REQUIREMENTS

A. Integrated rack components shall be tested to determine the vibroacoustic disturbance forces. This data shall be analyzed using the transfer functions contained in the Microgravity Control Plan, section **(TBD #13)**, and the methods described within to combine the component disturbance data. The verification shall be considered successful when the test data is analyzed using the prescribed method and the disturbance forces fall within the limits identified in the requirement.

B. **(TBD #14)**

4.3.1.2.3 TRANSIENT REQUIREMENTS

A. **(TBD #15)**

B. **(TBD #16)**

4.3.1.2.4 MICROGRAVITY ENVIRONMENT REQUIREMENTS

Information only. No verification required.

4.3.1.2.5 ARIS REQUIREMENTS

4.3.1.3 STOWAGE

Information only. No verification required.

4.3.2 ELECTRICAL INTERFACE REQUIREMENTS

NVR

4.3.2.1 ELECTRICAL POWER CHARACTERISTICS

NVR

4.3.2.1.1 STEADY-STATE VOLTAGE CHARACTERISTICS

NVR

4.3.2.1.1.1 INTERFACE B

Interface B steady-state voltage requirements shall be verified by test.

Verification of compatibility with steady-state voltage limits shall be performed by test at low and high input voltage values of 116 to 126 Vdc. The integrated rack shall be operated under selected loading conditions that envelope the operational loading.

The verification shall be considered successful when the test shows under low and high voltage conditions the integrated rack is compatible with the steady-state voltage limits of 116 to 126 Vdc.

Verification may be performed by the PRCU or equivalent.

4.3.2.1.1.2 INTERFACE C

Interface C steady-state voltage requirements shall be verified by test.

Verification of compatibility with steady-state voltage limits shall be performed by test at low and high input voltage values of 113 to 126 Vdc. The EPCE shall be operated under selected loading conditions that envelope operational loading.

The verification shall be considered successful when the test shows under low and high voltage conditions the EPCE is compatible with the steady-state voltage limits of 113 to 126 Vdc.

Verification may be performed by the PRCU or equivalent.

4.3.2.1.2 RIPPLE VOLTAGE CHARACTERISTICS

NVR

4.3.2.1.2.1 RIPPLE VOLTAGE AND NOISE

Ripple Voltage and Noise requirements shall be verified by analysis.

The verification shall be considered successful when the CS–01 test shows the integrated rack connected to interface B and EPCE (or Integrated rack in MPLM) connected to interface C operate and are compatible with the EPS time domain ripple voltage and noise level of at least 2.5 Vrms within the frequency range of 30 Hz to 10k Hz.

4.3.2.1.2.2 RIPPLE VOLTAGE SPECTRUM

Ripple Voltage Spectrum requirements shall be verified by analysis.

Verification shall be considered successful when analysis of the CS–01 and CS–02 test data shows the integrated rack connected to interface B and EPCE (or Integrated rack in MPLM) connected to interface C operates and is compatible with the ripple voltage spectrum in Figure 3.2.1.2.2–1 of this document.

4.3.2.1.3 TRANSIENT VOLTAGES

NVR

4.3.2.1.3.1 INTERFACE B

Transient Voltage requirements shall be verified by test or analysis.

Input voltage shall be 116 Vdc and 126 Vdc with the Interface B source impedance, as specified in SSP 30482, Volume I.

Verification of compatibility with the specified Transient Voltages shall be performed by test or analysis of the integrated rack operation across the transient envelope as specified in Figure 3.2.1.3.1–1 of this document.

The verification shall be considered successful when the test or analysis shows the integrated rack is compatible with the EPS transient voltage characteristics as specified in Figure 3.2.1.3.1–1.

4.3.2.1.3.2 INTERFACE C

Transient Voltage requirements shall be verified by test or analysis.

Input voltage shall be 113 Vdc and 126 Vdc with the Interface C source impedance, as specified in SSP 30482, Volume I.

Verification of compatibility with the specified Transient Voltages shall be performed by test or analysis of EPCE operation across the transient envelope as specified in Figure 3.2.1.3.2–1 of this document.

The verification shall be considered successful when the test or analysis shows the EPCE is compatible with the EPS transient voltage characteristics as specified in Figure 3.2.1.3.2–1.

4.3.2.1.3.3 FAULT CLEARING AND PROTECTION

Fault Clearing and Protection shall be verified by analysis.

The verification shall be considered successful when analysis shows the integrated rack at Interface B and EPCE at Interface C does not produce an unsafe condition or one that could result in damage to ISS equipment or payload hardware from the EPS transient voltages as specified in Figure 3.2.1.3.3–1 of this document.

4.3.2.1.3.4 NON-NORMAL VOLTAGE RANGE

The following verification requirements are applicable to paragraph 3.2.1.3.4A and B.

Verification of compatibility with Non-Normal voltage range conditions shall be performed by analysis. The analysis shall ensure the integrated rack or EPCE will not produce an unsafe condition or one that could result in damage to ISS equipment external to the integrated rack or EPCE when parameters are as specified in paragraph 3.2.1.3.4. The analysis should be performed with all converters directly downstream of Interface B or Interface C.

The verification shall be considered successful when analysis shows the integrated rack or EPCE is safe within ISS interface conditions as defined in paragraph 3.2.1.3.4.

4.3.2.1.4 DELETE

4.3.2.2 ELECTRICAL POWER INTERFACE

NVR

4.3.2.2.1 UIP AND UOP CONNECTORS AND PIN ASSIGNMENTS

A. NVR. Physical mating verification requirements are specified in section 4.3.1.1.6.1.

B. Verification of P1 and P2 appropriate pin assignment shall be by inspection. The inspection shall be an inspection of payload drawings to verify that the P1 and P2 pinouts match the corresponding J1 and J2 pinouts. The verification shall be considered successful when the inspection shows that the P1 and P2 connector pinout is appropriate.

C. Verification of the P1 and P2 connector with the requirements of SSQ 21635 shall be by inspection. The inspection shall consist of an inspection of the drawings to identify that the SSQ 21635 requirement is identified on the drawing for the P1 and P2 connectors.

D. NVR. Physical mating verification requirements are specified in section 4.3.1.1.6.1.

E. Verification of P3 and P4 appropriate pin assignment shall be by inspection. The inspection shall be an inspection of payload drawings to verify that the P3 and P4 pinouts match the corresponding J3 and J4 pinouts. The verification shall be considered successful when the inspection shows that the P3 and P4 connector pinout is appropriate.

F. Verification of the P3 and P4 connector with the requirements of SSQ 21635 shall be by inspection. The inspection shall consist of an inspection of the drawings to identify that the SSQ 21635 requirement is identified on the drawing for the P3 connector.

4.3.2.2.2 POWER BUS ISOLATION

A. Verification of Power Bus Isolation between two independent ISS Power Buses as specified, shall be performed by analysis. The verification shall be considered successful when the analysis shows the integrated rack, with a source voltage of + 126 Vdc, and its internal and external EPCE provides a minimum of 1–megohm isolation in parallel with not more than 0.03 microfarads of mutual capacitance between the two independent power buses including both the supply and return lines.

B. Verification of Power Bus Isolation without the use of diodes shall be verified by analysis. The analysis shall show the exclusion of diodes used to isolate the two independent ISS power bus high side or return lines. The verification shall be considered successful when analysis shows there are no diodes used, to electrically tie together independent ISS power bus high side or return lines, within the integrated rack and its internal and external EPCE.

4.3.2.2.3 COMPATIBILITY WITH SOFT START/STOP RPC

Compatibility with Soft Start/Stop RPC(s) shall be verified by test.

Verification of initialization with soft start/stop performance characteristics shall be performed by test when the initial supply of power is provided to the equipment connected to the RPC(s). Input power to the payload EPCE shall be delivered through a PRCU or equivalent. The EPCE connected to interface B or C shall be operated with multiple load combinations at levels ranging from 0% to 100% of the RPC rated conductivity.

The verification shall be considered successful when test shows the EPCE can initialize operation and prove compatibility with the soft start/stop RPC characteristics, representative of Figure 3.2.2.3–1, as specified in paragraph 3.2.2.3.

4.3.2.2.4 SURGE CURRENT

Surge Current shall be verified by test and analysis.

Input power to the integrated rack or EPCE should be representative of the ISS power environment.

Verification of compatibility with Surge Current limits shall be performed by test at high, nominal, and low input voltage values as specified. The power source used to perform the test shall be capable of providing a range of power between 0 kW to 6 kW at 116–126 Vdc for Interface B connected equipment and 0 kW to 1.44 kW at 113–126 Vdc for Interface C connected equipment. The EPCE shall be operated under selected loading conditions that envelope operational loading. The analysis shall be performed using test data from the above test. The analysis shall indicate operability and compatibility exist based on test data and the requirements specified in paragraph 3.2.2.4.

The verification shall be considered successful when test and analysis shows under high, nominal and low voltage conditions the EPCE can perform all functional capabilities and prove compatibility by operating within the specified limits of paragraph 3.2.2.4.

4.3.2.2.5 REVERSE CURRENT

Reverse Energy/Current shall be verified by analysis.

Input power to the integrated rack or EPCE should be representative of the ISS power environment.

Verification of compatibility with Reverse Energy/Current limits shall be performed by analysis at 6 kW, 3 kW or 1.44 kW values corresponding to the integrated rack or EPCE design. The power source used to perform the analysis shall be capable of providing a range of power between 0 kW to 6 kW at 116–126 Vdc for Interface B connected equipment and 0 kW to 1.44 kW at 113–126 Vdc for Interface C connected equipment. The EPCE shall be analyzed under selected loading conditions that envelope operational loading.

The verification will be considered successful when analysis shows that the integrated rack or EPCE complies with requirements defined in Table NO TAG for the reverse energy/current into the upstream power source. Also, when the reverse energy or the reverse current requirement for all environmental conditions specified in this document when powered from a voltage source

with characteristics specified in paragraphs 3.2.1 and 3.2.2.4 with a source impedance of 0.1 ohm is met.

4.3.2.2.6 CIRCUIT PROTECTION DEVICES

NVR

4.3.2.2.6.1 ISS EPS CIRCUIT PROTECTION CHARACTERISTICS

NVR

4.3.2.2.6.1.1 REMOTE POWER CONTROLLERS (RPCs)

A. Tests shall be performed to show the integrated rack connected to an Interface B ISPR location operates and is compatible with the characteristics shown and described in Figures 3.2.6–1, 3.2.6–2, 3.2.6–3 and paragraph 3.2.6 of SSP 57001. The tests shall be performed at initiation of power to the integrated rack and with multiple internal load combinations that include, but are not limited to sub-rack payloads. The verification shall be considered successful if the test results show the initial current flow, when powered “on”, to the integrated rack and current flow during the integrated rack operations with multiple internal load combinations including sub-rack payloads does not exceed the current magnitude and duration as defined and described in SSP 57001, Figures 3.2.6–1, 3.2.6–2, 3.2.6–3, and paragraph 3.2.6.

B. Tests shall be performed to show the integrated rack connected to a MPLM powered rack location operates and is compatible with the characteristics shown and described in Figures 3.2.6–1, 3.2.6–2, 3.2.6–3, 3.2.6–5 and paragraph 3.2.6 of SSP 57001. The tests shall be performed at initiation of power to the integrated rack and with multiple internal load combinations that include, but are not limited to sub-rack payloads. The verification shall be considered successful if the test results show the initial current flow, when powered “on”, to the integrated rack and current flow during the integrated rack operations with multiple internal load combinations including sub-rack payloads does not exceed the current magnitude and duration as defined and described in SSP 57001 Figures 3.2.6–1, 3.2.6–2, 3.2.6–3, 3.2.6–5 and paragraph 3.2.6.

C. Tests shall be performed to show the EPCE connected to a UOP location operates and is compatible with the characteristics shown and described in Figure 3.2.6–4 paragraph 3.2.6 of SSP 57001. The tests shall be performed at initiation of power to the EPCE and with load combinations for which the EPCE is designed. The verification shall be considered successful if the test results show the initial current flow, when powered “on”, to the EPCE and current flow during the EPCE operations with load combinations does not exceed the current magnitude and duration as defined and described in SSP 57001 Figure 3.2.6–4 and paragraph 3.2.6.

D. Analysis of electrical circuit schematics shall be performed to show overcurrent protection exists at all points in the payload electrical architecture system where power is distributed to lower level (wire size not protected by upstream circuit protection device) feeder and branch lines. The analysis shall be considered successful when results show overcurrent protection exists at each point in the payload electrical architecture system where power is distributed to lower level (wire size) feeder and branch lines.

E. Analysis of electrical circuit schematics shall be performed to show current limiting overcurrent protection exists for all internal loads drawing power from an interface B power feed(s). The analysis shall be considered successful when results show current limiting overcurrent protection exists in the distribution paths to all load devices connected to an interface B power feed(s).

4.3.2.2.6.2 EPCE RPC INTERFACE REQUIREMENTS

NVR

4.3.2.2.6.2.1 RPC TRIP COORDINATION

NVR

4.3.2.2.6.2.1.1 PAYLOAD TRIP RATINGS

The integrated rack or EPCE Trip Ratings shall be verified by test and demonstration.

Input power to the integrated rack or EPCE should be representative of the ISS power environment.

The test and demonstration shall be performed as specified in paragraph 4.3.2.2.6.1.1.

The verification shall be considered successful when test and demonstration shows the requirements specified in paragraph 4.3.2.2.6.1.1 are met.

4.3.2.2.6.2.1.2 DELETED

4.3.2.2.7 EPCE COMPLEX LOAD IMPEDANCES

NVR

4.3.2.2.7.1 INTERFACE B

The following verification requirements apply to paragraph 3.2.2.7.1A and B.

Integrated rack complex load impedance(s) shall be verified by test. *

* Verification may be performed by the PRCU or equivalent only if the PRCU or equivalent meets SSP 30482 Volume 1, Rev. C, source impedance requirements.

All active converters directly downstream of interface B shall be qualification or flight hardware. Loading of the downstream converter(s) can be simulated to provide full range of active converter loading.

Load impedance shall be tested under conditions of high, nominal, and low voltage to the integrated rack and with these conditions for the active converters directly downstream shall be exercised through the complete range of their loading. Selected combinations of converters that can influence the measured load impedance at Interface B shall be tested.

The verification shall be considered successful when the test shows that all load impedances measured for high, nominal and low voltage conditions remain within specified limits.

4.3.2.2.7.2 INTERFACE C

EPCE complex load impedance(s) shall be verified by test. *

* Verification may be performed by the PRCU or equivalent only if the PRCU or equivalent meets SSP 30482 Volume 1, Rev. C, source impedance requirements.

All active converters directly downstream of interface B shall be qualification or flight hardware. Loading of the downstream converter(s) can be simulated to provide full range of active converter loading.

Load impedance shall be tested under conditions of high, nominal, and low voltage to the integrated rack and with these conditions for the active converters directly downstream shall be exercised through the complete range of their loading. Selected combinations of converters that can influence the measured load impedance at Interface B shall be tested.

The verification shall be considered successful when the test shows that all load impedances measured for high, nominal, and low voltage remain within specified limits.

4.3.2.2.8 LARGE SIGNAL STABILITY

Large signal stability shall be verified by test and analysis. A large signal stability test shall be conducted for the integrated rack connected to Interface B and EPCE connected to Interface C. An integrated analysis shall be provided by the rack integrator for representative maximum and minimum case loads to demonstrate that impedance variations will not impact system stability. The input and transient response waveform for the integrated rack and EPCE shall be recorded from the start of the pulse through the time when the transient diminishes to and remains below 10 percent of the maximum amplitude of the response.

The required test conditions may be produced using a programmable power source or the setup shown in Figure 4.3.2.2.8–1. The 25 amp and 50 amp LISN or equivalent is to be used for Integrated racks connecting to Interface B and the 12 amp LISN or equivalent is to be used for EPCE connecting to Interface C as shown in Figure 4.3.2.2.8–2. The pulse generator/amplifier must provide a source impedance of less than 0.2 ohms from 100 Hz to 10 kHz to the 2 ohm load of the primary side of the pulse transformer. Pulses of 100, 125 and 150 microsecond (±10 microsecond) duration shall be applied. The pulse amplitude at the secondary side of the injection transformer should be between 10 and 15 Volts. Pulse rise and fall times must not exceed 10 microseconds between 10 and 90 percent of the pulse amplitude. The resulting transient responses must remain within the EPS normal transient limits.

The test and analysis shall be considered successful when results show transient responses, measured at the input to integrated rack or EPCE, diminish to 10 percent of the maximum amplitude within 1.0 milliseconds and remain below 10 percent thereafter.

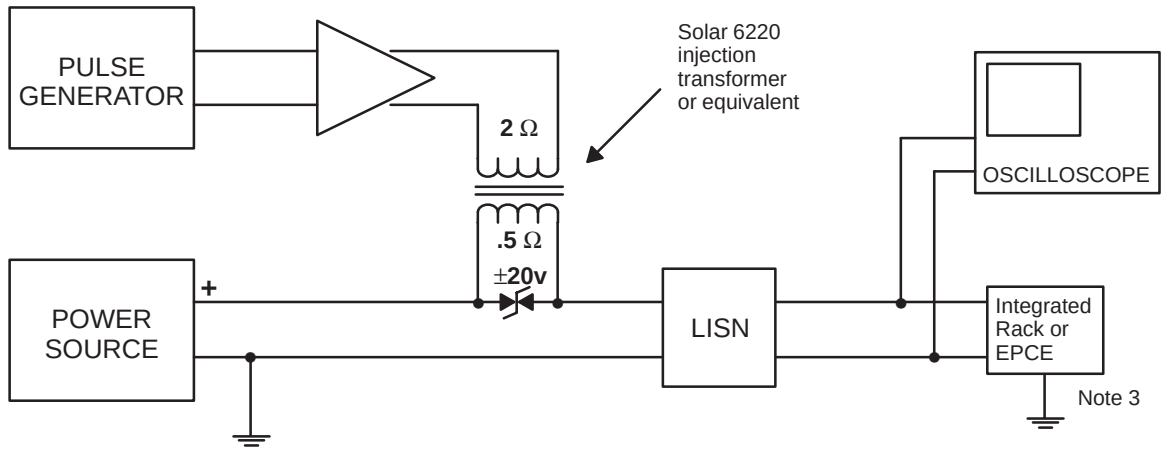

NOTES:
1. The output of the pulse generator must be applied to the transformer through a drive amplifier capable of providing an output impedance of 0.2 ohms, or less, from 100 Hz to 10 kHz.
2. The drive amplifier should be capable of delivering at least 75 watts rms into a 4 Ohm load and be suitable for EMC CS–01 tests.
3. Chassis of integrated rack must be grounded; portable equipment is not grounded.
4. Pulse generator, injection transformer and Zener diode may require adjustment to generate the test pulses and to protect the integrated rack or EPCE under test.

FIGURE 4.3.2.2.8–1 STABILITY TEST SETUP, TRANSIENT RESPONSES

3.5 – 25 ampere Line Impedance Simulation Network

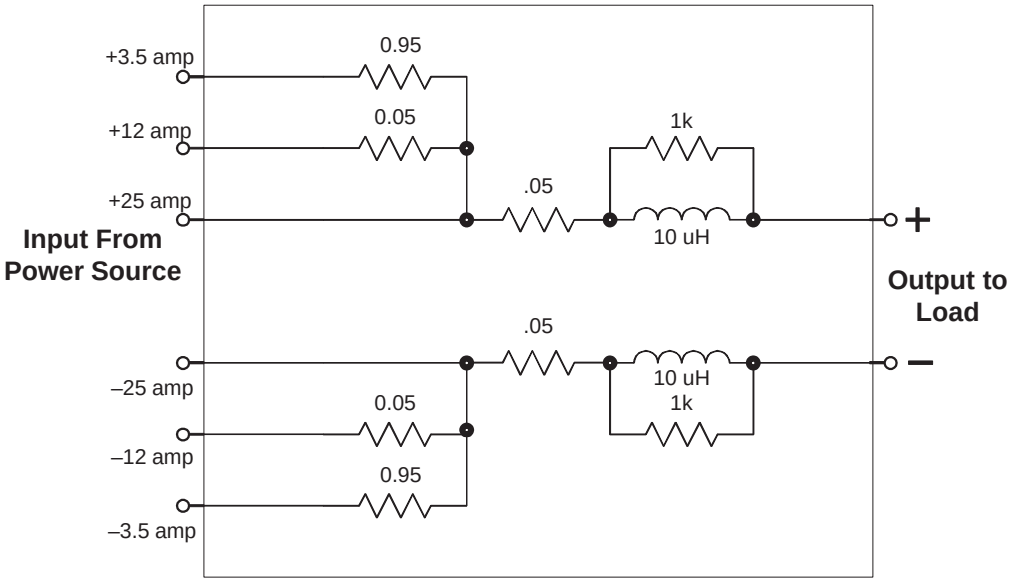

50 ampere Line Impedance Simulation Network

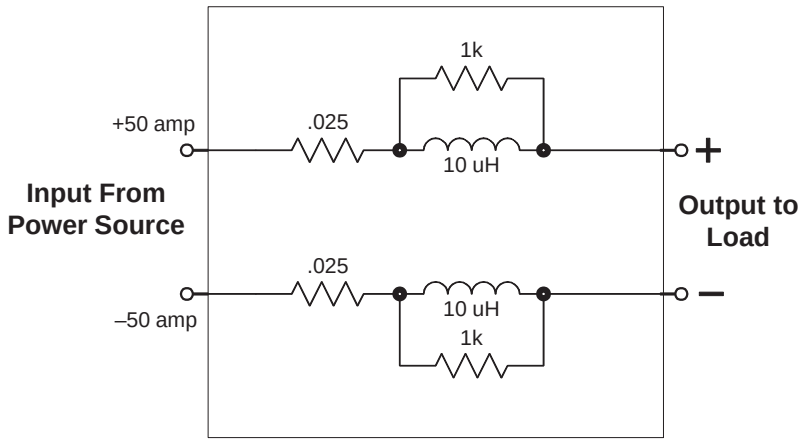

Note: Resistance is in Ohms

FIGURE 4.3.2.2.8–2 ISS LINE IMPEDANCE SIMULATION NETWORK (LISN)

4.3.2.2.9 MAXIMUM RIPPLE VOLTAGE EMISSIONS

Maximum Ripple Voltage Emissions shall be verified by test and analysis.

Maximum Ripple Voltage induced on each of the power lines by the integrated rack and EPCE connected to Interface B and Interface C, respectively, shall be verified by test using the CE–07 test configuration of SSP 30238 (measured with a 20 MHz bandwidth instrument). Maximum Ripple Voltage for the on-orbit configuration of an integrated rack shall be verified by analysis of test data from individual EPCE test results.

The verification shall be considered successful when:

(1) Test shows the integrated rack and EPCE does not induce voltage levels, at or upstream of Interface B and Interface C, greater than 0.5 Volts peak-to-peak from supply to return line.

(2) Analysis of test data shows the on-orbit configuration of an integrated rack does not induce voltage levels at or upstream of Interface B, greater than 0.5 volts peak-to-peak from supply to return line.

Note: Measurement of transients, as defined in SSP 30237 CE–07, is not required in this test procedure.

4.3.2.2.10 ELECTRICAL LOAD-STAND ALONE STABILITY

Verification of local stability requirements is defined in paragraph 4.3.2.4.4.

The verification shall be considered successful when analysis of test data for the requirements identified in the following paragraphs are met:

A. Paragraph 3.2.2.1 of SSP 30237 (CS01)

B. Paragraph 3.2.2.2 of SSP 30237 (CS02)

C. Paragraph 3.2.2.3 of SSP 30237 (CS06)

4.3.2.3 ELECTRICAL POWER CONSUMER CONSTRAINTS

NVR

4.3.2.3.1 WIRE DERATING

A. Derating for wire/cable between EPCE and the UOP shall be verified by analysis. Analysis of the electrical power schematics shall be performed to show that the wire between EPCE and UOP meets the derating requirements in SSP 30312. The verification shall be considered successful when the analysis shows the wire gauge meets the wire derating requirements in SSP 30312.

B. Wire derating for the EPCE at and downstream of the primary circuit protection device(s) in the integrated rack shall be verified by analysis. Analysis of the electrical power schematics shall be performed to show that the wire gauge of the integrated rack and EPCE meets the requirements of paragraph 3.2.3.1. The verification shall be considered successful when the analysis shows the integrated rack and EPCE meet the wire derating requirements as specified in NASA Technical Memo (TM) 102179 as interpreted by NSTS 18798, TA–92–038. Wire gauge meeting the requirements of SSP 30312 is accepted as meeting the requirements of NASA Technical Memo (TM) 102179 as interpreted by NSTS 18798, TA–92–038.

C. Wire size for the wire/cable from UIP to the primary circuit protection device(s) in ISPR shall be verified by inspection or analysis. Inspection or analysis of cable drawings shall be performed to show that the wire gauge meets the requirements specified in paragraph 3.2.3.1.C. The verification shall be considered successful when the inspection or analysis shows that 4 gauge wires are used for main and auxiliary connections from UIP to the primary circuit protection device(s) in ISPR.

4.3.2.3.2 EXCLUSIVE POWER FEEDS

The Exclusive Power Feeds requirement shall be verified by analysis of electrical circuit schematics. The analysis shall be considered successful when the electrical schematics show:

A. The integrated rack only receives power from the UIP dedicated to its rack location.

B. Cabling does not occur between Interface C connected EPCE with Interface B; and/or Interface B connected EPCE with interface C.

4.3.2.3.3 LOSS OF POWER

Verification that the equipment connected to Interface B or Interface C meets the loss of power safety requirements specified in NSTS 1700.7, ISS Addendum shall be performed and submitted to the PSRP in accordance with NSTS 13830. Verification shall be considered successful when hazard reports and safety data presented to the PSRP during the phased safety reviews are approved.

4.3.2.4 ELECTROMAGNETIC COMPATIBILITY

The Electromagnetic Compatibility (EMC) of the payload EPCE shall be verified by test, analysis and/or inspection. The test shall be considered successful when the results show that payload EMC is in compliance with the requirements of SSP 30243, paragraphs 3.1, 3.5, and 3.6.2. The analysis shall be based on end item qualification data and payload EPCE design and analysis data. The analysis shall be considered successful when the data shows the payload EPCE meets the EMC requirements of SSP 30243, paragraphs 3.1, 3.5, and 3.6.2. The inspection shall be based on physical/visual indications of the payload EPCE. The inspection shall be considered successful when physical/visual indications show the EMC requirements of SSP 30243, paragraph 3.1, 3.5, and 3.6.2 are met.

The requirements of SSP 30243 paragraphs 3.1 and 3.6.2 shall be verified by test and analysis. The test shall be considered successful when results show the integrated rack connected to Interface B and EPCE connected to Interface C meet the requirements specified in SSP 30243 paragraph 3.6.2. The results of the EMC test shall be documented in the EMC test plan/report.

The analysis shall be documented in an EMC Control Plan and Design Analysis Report. The analysis shall include determining the necessary requirements for equipment not connected directly to Interface B and Interface C such that the entire payload meets the EMC requirements of this IRD. The analysis shall be considered successful when results show that the requirements defined in section 3.1 of SSP 30243 have been met.

Note:

1. The Control Plan and the Design Analysis Report can be combined into one document per payload provider format.

2. Clarifications to SSP 30243, paragraph 3.6.2:

    - Only the impedance characteristics of the power source need to be simulated.
    - Only representative simulated signals and loads for the interface tests are required.
    - Verification of the on–orbit configuration of the integrated rack may be performed analytically if and only if the on–orbit configuration differs from the Qualification Test configuration.

3. Details of the EMC Control Plan, Design Analysis Report, and EMC Test Plan/Report are located in SSP 57010.

4. If analysis shows requirements of paragraph 3.6.2 of SSP 30243 are met during Integrated rack or multiple EPCE EMI testing, as defined in paragraph 3.2.4.4. of this document, a separated EMC test plan/report is not needed.

4.3.2.4.1 ELECTRICAL GROUNDING

The Electrical Grounding of the payload EPCE shall be verified by test and analysis. The test shall be considered successful when the results show that payload grounding is in compliance with the requirements in section 3 of SSP 30240. The analysis shall be based on end item qualification data and payload EPCE design and analysis data. The analysis shall be considered successful when the data shows the payload EPCE is electrically grounded within the requirements of section 3 of SSP 30240.

4.3.2.4.2 ELECTRICAL BONDING

The Electrical Bonding of the payload EPCE shall be verified by Test, Analysis and Inspection. The test shall be considered successful when the results show all requirements of SSP 30245 and the requirements of NSTS 1700.7, ISS Addendum in sections 213 and 220 are met. The analysis shall be based on end item qualification data and Payload EPCE design and analysis data. The analysis shall be considered successful when the data shows the payload EPCE is electrically bonded within the requirements of SSP 30245 and the requirements of NSTS 1700.7, ISS Addendum in sections 213 and 220 are met. The inspection shall be based on physical/visual indications of the payload EPCE. The inspection shall be considered successful when physical/visual indications show all requirements of SSP 30245 and the requirements of NSTS 1700.7, ISS Addendum in sections 213 and 220 are met.

4.3.2.4.3 CABLE/WIRE DESIGN AND CONTROL REQUIREMENTS

The Cable and Wire Design of the payload EPCE external cables shall be verified by T, A, or I. The test shall be considered successful when the results show all requirements of SSP 30242 are met. The analysis shall be based on payload EPCE design and analysis data. The analysis shall be considered successful when the results show all requirements of SSP 30242 are met. The inspection shall be based on physical/visual indications of the payload EPCE. The inspection shall be considered successful when physical/visual indications show that external cable and wire design is in compliance with the requirements of SSP 30242.

SSP 30242 harness requirements can normally be met by inspection of drawings and hardware. Analysis is required to classify signals and determine the necessary isolation between signals. Test may be required to determine impedance and sensitivity characteristics of the circuit when classification cannot be determined by examination of the circuit known characteristics.

4.3.2.4.4 ELECTROMAGNETIC INTERFERENCE

The Electromagnetic Interference of the payload EPCE shall be verified by test and analysis. Tests shall be performed and data submitted for conducted susceptibility and radiated susceptibility, in addition to that for conducted emissions and radiated emissions. This data shall be evaluated against the limits of SSP 30237.

The test results shall be documented in the EMI test plan/report. The test shall be considered successful when the results show requirements of SSP 30237 are met.

Note: EMI test plan/report details are located in SSP 57010.

The analysis of each integrated rack shall be performed using sub-integrated rack equipment test data as mentioned in the above paragraph. The analysis shall be considered successful when the results show requirements of SSP 30237 are met.

This analysis includes evaluating the degree of isolation from 30 Hz to 400 MHz provided by the EPCE for power ripple and transients to the equipment using isolated power. An analysis of the isolation in conjunction with the equipment conducted requirements should be submitted in the EMC Control Plan to verify the requirements of this IRD are met.

The EMI test methods shall be as specified in SSP 30238.

4.3.2.4.5 ELECTROSTATIC DISCHARGE

The susceptibility of the Electrostatic Discharge of the unpowered payload EPCE and its components shall be verified by test or analysis and inspection. The analysis shall be based on payload EPCE design and analysis data. The test or analysis shall be considered successful when the results show the requirement in paragraph 3.2.4.5 of this document is met. The inspection shall be based on physical/visual indication of the payload EPCE. The inspection shall be considered successful when physical/visual indications show the labeling of EPCE susceptible to ESD up to 15, 000 V are in accordance with MIL–STD–1686.

4.3.2.4.6 ALTERNATING CURRENT (AC) MAGNETIC FIELDS

The AC Magnetic Fields requirement for the integrated rack connected to Interface B and EPCE connected to Interface C, including cables and interconnecting wiring, shall be verified by test.

The test shall be performed using the MIL–STD–462D RE01 Method with the following modifications:

1. Test setup guidelines shall be per SSP 30238, Figure 3–9 or 3–10, not the setup identified by MIL–STD–462D

2. Guidelines of SSP 30238, Figures 3–9 and 3–10, requirement of 1 meter separation does not apply to RE01

3. Measurements are required from 30 Hz to 50 kHz rather than 100 kHz required by MIL–STD–461D

4. Measurements are performed at 7 cm from the generating equipment. In the event emissions are out–of–specification, measurements are performed at 50 cm from the generating equipment.

5. Emissions greater than 20 dB below the specified limits shall be recorded in the EMI test report. In cases where the noise floor and ambient are not 20 dB below specified level, only those emissions above the noise floor/ambient are required to be recorded.

The verification shall be considered successful when test results show the generated ac magnetic fields of the integrated rack connected to Interface B and EPCE connected to Interface C, including cables and interconnecting wiring, do not exceed 140 dB above 1 picotesla between 30 Hz to 2kHz, and the fall off is no less than 40 dB per decade to 50 kHz.

4.3.2.4.7 DIRECT CURRENT (DC) MAGNETIC FIELDS

The DC magnetic fields requirement for the integrated rack connected to Interface B and D connected to Interface C with electromagnetic and/or permanent magnetic devices shall be verified by test or analysis.

The measurement or analysis of DC magnetic fields shall be performed at 7 cm from the generating equipment. For integrated racks and EPCE that exceed the design requirement, measurements or analysis at 10 cm from the generating equipment shall be performed if there is a DC magnetic field greater than 170 dB above 1 picotesla. Additional measurements or analysis shall be performed at 10 cm increments away from the generating equipment until data proves the DC magnetic fields are 6 dB below the 170 dB above 1 picotesla requirement.

The verification shall be considered successful when test or analysis results show the generated dc magnetic fields of the integrated rack connected to Interface B and EPCE connected to Interface C do not exceed 170 dB above 1 picotesla at a distance of 7 cm from the generating equipment, including electromagnetic and permanent magnetic devices.

4.3.2.4.8 CORONA (TBR #6)

Equipment with voltages (steady–state, transient, internal, or external) greater than 190 volts or equipment containing gases mixture other than those present in the pressurized module shall be verified by analysis or test to the degree necessary to ensure no permanent damaging effects and no hazardous conditions due to destructive corona will exist in its operating environment. The operating environment is defined as normal pressurized atmosphere as specified in Table 3.9.4–1 or depressurized module if the payload is still powered. The fault clearing and protection voltage defined in Paragraph 3.2.1.3.3. is not considered the equipment voltage. If the equipment (with voltages greater than 190 volts) may be powered during depressurization, the verification shall be by test.

4.3.2.4.9 LIGHTNING

The Lightning requirement shall be verified by analysis.

The analysis shall be considered successful when the data shows that the integrated rack and EPCE is compatible with the requirements specified in paragraph 3.2.4.9. Note: The analysis data should be based on end item qualification design data and analysis data of the integrated rack or EPCE.

4.3.2.4.10 EMI SUSCEPTIBILITY FOR SAFETY-CRITICAL CIRCUITS

Safety critical circuits should be verified by test and analysis. The analysis shall be considered successful when the results show the requirements of SSP 30243, paragraph 3.2.3 are met.

4.3.2.5 SAFETY REQUIREMENTS

NVR

4.3.2.5.1 PAYLOAD ELECTRICAL SAFETY

NVR

4.3.2.5.1.1 MATING/DEMATING OF POWERED CONNECTORS

Verification that the equipment connected to Interface B or Interface C meets the loss of power safety requirements specified in NSTS 1700.7, ISS Addendum shall be performed and submitted to the PSRP in accordance with NSTS 13830. Verification shall be considered successful when hazard reports and safety data presented to the PSRP during the phased safety reviews are approved.

4.3.2.5.1.2 SAFETY-CRITICAL CIRCUITS REDUNDANCY

Verification that the equipment connected to Interface B or Interface C meets the loss of power safety requirements specified in NSTS 1700.7, ISS Addendum shall be performed and submitted to the PSRP in accordance with NSTS 13830. Verification shall be considered successful when hazard reports and safety data presented to the PSRP during the phased safety reviews are approved.

4.3.2.5.2 RACK MAINTENANCE SWITCH (RACK POWER SWITCH)

Rack Maintenance Switch shall be verified by Inspection and Demonstration.

The inspection shall ensure the integrated rack is equipped with a Rack Maintenance Switch on the front of the integrated rack. The demonstration shall be performed to ensure the data signals from the Rack Maintenance Switch indicate the designed voltage and current levels expected for both the on and off positions.

The verification shall be considered successful when the inspection shows the integrated rack is equipped with a Rack Maintenance Switch on the front of the integrated rack and demonstration that data signals from the Rack Maintenance Switch indicates the designed voltage and current levels expected for both the on and off positions.

4.3.2.5.3 POWER SWITCHES/CONTROLS

The power switches/controls requirements shall be verified by analysis for power interfaces with open circuit voltage exceeding 30 volts rms or dc nominal (32 volts rms or dc maximum).

A. Switches/controls requirement shall be verified by analysis. An analysis shall be performed to ensure the switches/controls performing on/off functions for all power interfaces open (dead-face) all supply circuit conductors, except the power return and equipment grounding conductor, while in the power-off position. Verification shall be considered successful when analysis of electrical circuit schematics shows the switches/controls performing on/off power functions for all power interfaces open (dead-face) all supply conductors except the power return and equipment grounding conductor, while in the power-off position.

B. Power-off markings and/or indications requirement shall be verified by analysis. The analysis shall ensure power-off markings and/or indications exist when all electrical connections with the power supply circuit are disconnected. The verification shall be considered successful when analysis shows power switches/controls power-off markings and/or indication(s) exist when all electrical connections with the power supply circuit are disconnected.

C. Standby, charging and descriptive nomenclature requirement shall be verified by analysis. The analysis shall ensure the existence of descriptive nomenclature such as standby, charging, or that necessary to indicate the power supply circuit is not completely disconnected for this power condition. The verification shall be considered successful when analysis shows descriptive nomenclature exists to indicate the power supply circuit is not completely disconnected.

4.3.2.5.4 GROUND FAULT CIRCUIT INTERRUPTERS/PORTABLE EQUIPMENT DC SOURCING VOLTAGE

Ground Fault Circuit Interrupters/Portable Equipment DC Sourcing Voltage requirement shall be verified by demonstration, test, and analysis.

A. The analysis of electrical wiring schematics shall ensure a GFCI is in the non-portable utility outlet and is in the power path to portable equipment receiving voltages, exceeding 30 volts rms nominal voltage, or dc nominal voltage (32 volts rms or dc maximum) from a non-portable utility outlet. The verification shall be considered successful when the analysis shows a GFCI is in the non–portable utility outlet and is in the power path between the non-portable utility outlet power source, supplying output voltages exceeding 30 volts rms or dc nominal voltages (32 volts rms or dc maximum), and the load receiving power from the non-portable utility outlet.

B. The test shall ensure the DC trip detection is independent of the portable equipment's safety (green) wire. The verification shall be considered successful when the test shows the DC trip detection does not depend on the current sensing of the portable equipment's safety (green) wire.

C. The test shall ensure the AC trip detection is dependent on the portable equipment's safety (green) wire when the safety (green) wire is present. The verification shall be considered successful when the test shows the AC trip detection depends on the current sensing of the portable equipment's safety (green) wire when the safety (green) wire is present. If an analysis including all the loads which may be connected to the utility outlet shows that AC fault currents do not exist under any failure conditions, this test is not required.

D. The analysis shall ensure the GFCI protection is included within the portable equipment and is in the credible fault path or return path, defined and documented in the Hazard Analysis, for equipment with internal voltages greater than 30 volts rms or dc nominal (32 volts rms or dc maximum). A credible fault/return path within the portable equipment is a fault/return path to a crewmember not protected by the GFCI within the utility outlet supplying power to the portable equipment. The test shall ensure that GFCI trips without exceeding the currents specified in Table 3.2.5.4–1. The verification shall be considered successful when the analysis shows the GFCI protection is included within the portable equipment and is in the credible fault path or return path to a crewmember for portable equipment with nominal voltage above 30 volts rms or dc (32 volts rms or dc maximum) and the test shows GFCI trips before exceeding the current levels specified in Table 3.2.5.4–1.

E. The test shall ensure non-portable utility outlets, supplying power to portable equipment, include GFCI that trips without exceeding the currents specified in Table 3.2.5.4–1. The verification shall be considered successful when the test shows GFCI, within non-portable utility outlets, trips before exceeding the current levels specified in Table 3.2.5.4–1. If an analysis including all the loads which may be connected to the utility outlet shows that AC fault currents do not exist under any failure conditions, this test for AC current is not required.

F. The test shall ensure the GFCI removes power from the output power leads within 25 milliseconds upon encountering the fault current. The verification shall be considered successful when the test shows GFCI removes power from the output power leads within 25 milliseconds upon encountering the fault current.

G. The analysis shall ensure the GFCI provides an on-orbit method for testing the trip current detection threshold at DC and at a frequency within the maximum human sensitivity range of 15 to 70 Hertz. The method for the GFCI on-orbit check-out shall be verified by demonstration. The verification shall be considered successful when the analysis shows GFCI provides an on-orbit method and procedure for testing the trip current detection threshold at DC and at a frequency within 15 to 70 Hertz, and the demonstration shows that the on-orbit check-out method will trip the GFCI circuit and the GFCI circuit can be manually reset.

4.3.2.5.5 PORTABLE EQUIPMENT/POWER CORDS

A. Analysis of schematics shall ensure non-battery powered portable equipment, incorporates a three-wire power cord containing a supply (+) lead, a return (–) lead and a safety (green) wire. Verification shall be considered successful when the analysis shows the portable equipment/power cords contains a supply (+) lead, a return (–) lead and a safety (green) wire with one end connected to the portable equipment chassis (and all exposed conductive surfaces) and the other end connected to structure at the utility outlet or through the GFCI interface if GFCI is used. Use of double insulation or its equivalent without the safety (green) wire, when used as an alternative, shall be documented in the payload unique ICD as an exception.

B. The Analysis shall ensure the fault currents through the credible fault path or return path to the crewmember resulting from a single failure at the primary (input) side of the power converter within non-battery powered portable equipment, i.e., portable equipment receiving power from the utility outlet provided by ISS or payload, do not exceed the total peak currents specified in Table 3.2.5.4–1 for fault current frequencies of 15 Hertz and above. Verification shall be considered successful when the analysis shows fault current resulting from a single failure doesn't exceed the total peak currents specified in the profile shown in Table 3.2.5.4–1 for fault current frequencies of 15 Hertz and above. The verification is not required for portable equipment with internal voltages below 30 volts rms or dc nominal (32 volts rms or dc maximum).

4.3.2.5.6 DELETED

4.3.2.6 MPLM

NVR

4.3.2.6.1 MPLM ELECTRICAL POWER CHARACTERISTICS

The operation and compatibility of the integrated rack with MPLM Electrical Power Characteristics shall be verified by the Interface C verification requirements in the following paragraphs:

A. Paragraph 4.3.2.1.1.2

B. Paragraph 4.3.2.1.2.1

C. Paragraph 4.3.2.1.2.2

D. Paragraph 4.3.2.1.3.2

E. Paragraph 4.3.2.1.3.3

F. Paragraph 4.3.2.1.3.4

G. Paragraph 4.3.2.1.3.4

H. Deleted

I. Deleted

4.3.2.6.2 MPLM ELECTRICAL POWER INTERFACE

Integrated rack shall meet the electrical power interface verification requirements in the following paragraphs:

A. Paragraph 4.3.2.2.6.1.1, B

B. Paragraph 4.3.2.2.6.1.1, D

C. Paragraph 4.3.2.2.7.2

D. Paragraph 4.3.2.2.8

E. Paragraph 4.3.2.2.9, with the 12 amp LISN in Figure 3.2.2.9–1 used in the test setup.

F. Paragraph 4.3.2.2.10

4.3.2.6.2.1 MPLM UIP CONNECTORS AND PIN ASSIGNMENTS

A. NVR. Physical mating verification requirements are specified in paragraph 4.3.1.1.6.1.

B. Verification of appropriate pin assignment shall be by inspection. The inspection shall be an inspection of payload drawings to verify that the P1 pinouts match the corresponding J1 pinouts. The verification shall be considered successful when the inspection shows that the P1 connector pinout is appropriate.

C. Verification of the P1 connector with the requirements of SSQ 21635 shall be by inspection. The inspection shall consist of an inspection of the drawings to identify that the SSQ 21635 requirement is identified on the drawing for the P1 connectors.

4.3.2.6.2.1.1 PAYLOAD TRIP RATINGS

The integrated rack or EPCE Trip Ratings shall be verified by analysis.

An analysis shall be performed for the integrated rack connected to Interface B. The analysis will compare the current rating and trip characteristics of the circuit protection device in the integrated rack to the current rating and trip characteristics of the upstream RPC.

The verification shall be considered successful when the analysis shows that the circuit protection device in the integrated rack will trip before the upstream RPC.

4.3.2.6.2.2 COMPATIBILITY WITH RPC SOFT START/STOP IN MPLM

Compatibility with RPC Soft Start/Stop in MPLM shall be verified by test.

Verification of compatibility with RPC soft start/stop performance characteristics shall be performed by test when the initial supply of power is provided to the equipment connected to the RPC(s). Input power to the integrated rack shall be delivered through a PRCU or equivalent. The integrated rack connected to interface C shall be operated with multiple load combinations at levels ranging from 0% to 100% of the rated load current.

The verification shall be considered successful when test shows the integrated rack can initialize operation and is compatible with the RPC soft start/stop characteristics shown in Figure 3.2.6.2.2–1, as specified in paragraph 3.2.6.2.2.

4.3.2.6.2.3 MPLM SURGE CURRENT

Surge Current shall be verified by test and analysis. Input power to the integrated rack should be representative of the ISS power environment. Verification of compatibility with Surge Current limits shall be performed by test at high, nominal, and low input voltage values as specified. The power source used to perform the test shall be capable of providing a range of power between 0 kW to 1.2 kW at 113–126 Vdc. The integrated rack shall be operated under selected loading conditions that envelope operational loading. The analysis shall be performed using test data from the above test. The analysis shall indicate that the integrated rack can operate and is compatible with the Interface C electrical power characteristics based on test data and the requirements specified in paragraph 3.2.6.2.3.

The verification shall be considered successful when test and analysis show under high, nominal and low voltage conditions the surge current is less than 9.8 A for an integrated rack at the high

power location, or less than 5.3 A at the low power location, the maximum current rate of change shall not exceed the values defined in Figure 3.2.2.4–2, and the duration of the surge current shall not exceed 9 milliseconds.

4.3.2.6.2.4 MPLM REVERSE ENERGY/CURRENT

Reverse Energy/Current shall be verified by analysis.

Input power to the integrated rack should be representative of the ISS power environment.

Verification of compatibility with Reverse Energy/Current limits shall be performed by analysis at the input power level corresponding to the integrated rack design. The power source used to perform the analysis shall be capable of providing a range of power between 0 kW to 1.2 kW at 113–126 Vdc. The integrated Rack shall be analyzed under selected loading conditions that envelope operational loading.

The verification shall be considered successful when analysis shows that the reverse current from the integrated rack to the upstream power source does not exceed 0.9 Amps for all environmental conditions specified in this document when powered from a voltage source with characteristics specified in paragraphs 3.2.6.1 and with a source impedance of 0.1 ohm.

4.3.2.6.2.5 MPLM PAYLOAD TRIP RATINGS

The trip ratings shall be verified by analysis.

The verification shall be considered successful when the analysis shows that trip ratings of all protective devices in the integrated rack are coordinated with the upstream RPC current-limiting and trip characteristics so that a fault that causes the tripping of a downstream protective device will not also trip the upstream RPC.

4.3.2.6.3 MPLM ELECTRICAL POWER CONSUMER CONSTRAINTS

Electrical power consumer constraints shall be verified by the verification requirements in the following paragraphs:

A. Paragraph 4.3.2.3.1.B

B. Paragrph 4.3.2.3.1.C

C. Paragraph 4.3.2.3.2.A

D. Paragraph 4.3.2.3.3

4.3.2.6.4 MPLM ELECTROMAGNETIC COMPATIBILITY

The electromagnetic compatibility (EMC) requirements of an integrated rack in MPLM shall be verified by the verification requirements in the following paragraphs:

A. Paragraph 4.3.2.4.1, Electrical Grounding

B. Paragraph 4.3.2.4.2, Electrical Bonding

C. Paragraph 4.3.2.4.3, Cable/Wire Design and control requirements

D. Paragraph 4.3.2.4.4, Electromagnetic Interference

E. Paragraph 4.3.2.4.5, Electrostatic Discharge

F. Paragraph 4.3.2.4.6, Alternating Current (ac) Magnetic Fields

G. Paragraph 4.3.2.4.7, Direct Current (dc) Magnetic Fields

H. Paragraph 4.3.2.4.8, Corona

I. Paragraph 4.3.2.4.9, Lightning

J. Paragraph 4.3.2.4.10, EMI Susceptibility for Safety-Critical Circuits

4.3.2.6.4.1 MPLM BONDING

The bonding between an integrated rack and MPLM shall be verified by Analysis. The analysis shall be based on integrated rack qualification data, and design and analysis data. The verification shall be considered successful when the data shows the bonding between the integrated rack and MPLM meets the class R bonding requirements in accordance with SSP 30245, Space Station Electrical Bonding Requirements.

4.3.2.6.5 MPLM SAFETY REQUIREMENTS

The MPLM safety requirements shall be verified by the verification requirements in the following paragraphs:

A. Paragraph 4.3.2.5.1.1

B. Paragraph 4.3.2.5.1.2

C. Paragraph 4.3.2.5.2

D. Paragraph 4.3.2.5.3

E. Paragraph 4.3.2.5.4

F. Paragraph 4.3.2.5.5

4.3.3 COMMAND AND DATA HANDLING INTERFACE VERIFICATION REQUIREMENTS

4.3.3.1 GENERAL REQUIREMENTS

NVR

4.3.3.2 WORD/BYTE NOTATIONS, TYPES AND DATA TRANSMISSIONS

Information only, NVR

4.3.3.2.1 WORD/BYTE NOTATIONS

Verification of the word/byte notations shall be by inspection.

The inspection shall consist of a review of the word/byte notations against paragraph 3.1.1, Notations, of SSP 52050, and paragraph 3.1.1, Data Bit/Byte Numbering Convention, of SSP 57002.

Verification shall be considered successful when it is shown that the word/byte notations in the unique payload software ICD conforms with paragraph 3.1.1, Notations, of SSP 52050, and paragraph 3.1.1, Data Bit/Byte Numbering Convention, of SSP 57002.

4.3.3.2.2 DATA TYPES

Verification of the data types shall be by inspection.

The inspection shall consist of a review of the data types against paragraph 3.2.1 and subparagraphs, Data Formats, of SSP 50250.

Verification shall be considered successful when it is shown that the data types in the unique payload software ICD conforms with paragraph 3.2.1 and subparagraphs, Data Formats, of SSP 52050.

4.3.3.2.3 DATA TRANSMISSIONS

A. Verification of the Low Rate Data Link (LRDL) transmissions shall be by inspection. The inspection shall consist of a review of the LRDL data transmissions against paragraph 3.4, Non–Signal Data Coding Standards, of D684–10056–01. Verification shall be considered successful when it is shown that the word/byte notations in the unique payload software ICD conforms with paragraph 3.4, Non–Signal Data Coding Standards, of D684–10056–01.

B. Verification of the Medium Rate Data Link (MRDL) transmissions shall be by inspection. The inspection shall consist of a review of the MRDL data transmissions against paragraph 3.3.3.1, Transmission Order, of SSP 52050. Verification shall be considered successful when it is shown that the word/byte notations in the unique payload software ICD conforms with paragraph 3.3.3.1, Transmission Order, of SSP 52050.

C. Verification of the High Rate Data Link (HRDL) transmissions shall be by inspection. The inspection shall consist of a review of the HRDL data transmissions against paragraph 1.6, Bit Numbering Convention and Nomenclature, of CCSDS 701.0–B–2. Verification shall be considered successful when it is shown that the word/byte notations in the unique payload software ICD conforms with paragraph 1.6, Bit Numbering Convention and Nomenclature, of CCSDS 701.0–B–2.

4.3.3.3 DELETED

4.3.3.4 CONSULTATIVE COMMITTEE FOR SPACE DATA SYSTEMS

NVR

4.3.3.4.1 CCSDS DATA

Verification of the CCSDS data for 3.3.4.1.A, B, and C shall be by analysis or test.

The analysis shall consist of a review of the CCSDS data in the software design documentation. The test shall consist of a data transmission with the PRCU and inspection of the transmitted data against the SSP 52050 formats.

Analysis shall be considered successful when it is shown that in the software design documentation the integrated rack data which is transmitted space to ground is either CCSDS data packets or bitstream and the integrated rack data which is transmitted ground to space or to the payload MDM is CCSDS data packets.

Test shall be considered successful when the PRCU correctly receives the CCSDS data.

4.3.3.4.1.1 CCSDS DATA PACKETS

Verification of the CCSDS data packet shall be by test.

The test shall consist of a data transmission with the PRCU and inspection of the transmitted data against the SSP 52050 formats.

Test shall be considered successful when the PRCU correctly receives the CCSDS data packets.

4.3.3.4.1.1.1 CCSDS PRIMARY HEADER

Verification of the CCSDS primary header shall be by test.

The test shall consist of a data transmission with the PRCU and inspection of the transmitted data against the SSP 52050 formats.

Test shall be considered successful when the PRCU correctly receives the CCSDS primary header.

4.3.3.4.1.1.2 CCSDS SECONDARY HEADER

Verification of the CCSDS secondary header shall be by test.

The test shall consist of a data transmission with the PRCU and inspection of the transmitted data against the SSP 52050 formats.

Test shall be considered successful when the PRCU correctly receives the CCSDS secondary header.

4.3.3.4.1.2 CCSDS DATA FIELD

Verification of the CCSDS data field shall be by test.

The test shall consist of a data transmission with the PRCU and inspection of the transmitted data against the SSP 52050 formats.

Test shall be considered successful when the PRCU correctly receives the CCSDS data field.

4.3.3.4.1.3 CCSDS DATA BITSTREAM

Verification of the CCSDS bitstream shall be by test.

The test shall consist of a transmission of a known set of bits and an inspection of the received data with the transmitted data.

Test shall be considered successful when the PRCU correctly receives the CCSDS bitstream.

4.3.3.4.1.4 CCSDS APID FIELD

NVR

4.3.3.4.2 CCSDS TIME CODES

NVR

4.3.3.4.2.1 CCSDS UNSEGMENTED TIME

Verification of the CCSDS unsegmented time shall be by test.

The test shall consist of a data transmission with the PRCU and inspection of the transmitted data against the SSP 52050 formats.

Verification shall be to test the integrated rack with the PRCU, for correct test CCSDS unsegmented time.

4.3.3.4.2.2 CCSDS SEGMENTED TIME

NVR

4.3.3.5 MIL-STD-1553B LRDL

Verification of the MIL–STD–1553B LRDL shall be by test.

The test shall consist of an integrated rack's Payload Bus Remote Terminal and RT Validation Test Set, provided by ISS, used in the performance of a complete RT Validation in accordance with MIL–HDBK–1553, Notice 1, Appendix A, RT Validation Test Plan, to verify the design.

The test shall be considered successful when the integrated rack's Payload Bus Remote Terminal meets the RT Validation test as specified.

4.3.3.5.1 MIL-STD-1553B PROTOCOL

NVR

4.3.3.5.1.1 STANDARD MESSAGES

Verification of the standard messages shall be by inspection and test.

The test shall consist of the PRCU transmitting and receiving standard messages with the integrated rack.

Test shall be considered successful when the PRCU correctly receives the standard messages.

4.3.3.5.1.2 COMMANDING

Verification of the commanding shall be by test.

The test shall consist of the PRCU issuing commands to the integrated rack.

Test shall be considered successful when the integrated rack correctly responds to the commands issued by the PRCU.

4.3.3.5.1.3 HEALTH AND STATUS DATA

Verification of the health and status data shall be by test.

The test shall consist of the reception to the PRCU of the integrated rack's health and status data.

The payload health and status data shall be tested during checkout with the Payload Rack Checkout Unit (PRCU), the Suitcase Test Environment for Payloads (STEP) or equivalent. The payload health and status data shall be transmitted into the PRCU, the STEP, or equivalent and logged. Subsequent inspection of the logged data shall verify that it exists as defined in the unique payload software ICD. Inspection shall be considered successful when it is shown that the health and status data in the unique payload software ICD conforms with the format contained in Table 3.2.3.5–1, Health and Status Packet Format, of SSP 52050 and the data field format specified in Table A–5, Health and Status ISS Processed Data Packets, of SSP 57002.

Test shall be considered successful when the PRCU, STEP, or equivalent correctly receives the health and status data as it is defined in the unique payload software ICD.

4.3.3.5.1.4 SAFETY DATA

Verification of the safety data shall be by test.

The test shall consist of a transmission of a Class 2, Class 3, and Class 4 Caution and Warning message and an inspection of the received data against the format of paragraph 3.2.3.5, Health and Status Data, of SSP 52050 and Table A–1, Telementry Parameter Definition, and Table A–5, Health and Status ISS Processed Data Packets, of SSP 57002.

Test shall be considered successful when the PRCU correctly receives the safety data.

4.3.3.5.1.4.1 CAUTION AND WARNING

NVR

4.3.3.5.1.4.1.1 CLASS 1 – EMERGENCY

NVR

4.3.3.5.1.4.1.2 CLASS 2 – WARNING

Verification that the integrated rack formats the C&W word for the listed warning events shall be by analysis and test.

Analysis of the payload safety hazard reports and payload safety review data shall identify the types of events identified as warnings that are being monitored.

The test shall use the STEP, PRCU or equivalent to determine whether or not the C&W word in the integrated rack’s health and status is formatted as a warning for the events identified as warnings.

Verification shall be considered successful when the analysis shows the C&W word is formatted in accordance with paragraph 3.2.3.5, Health and Status Data, of SSP 52050 as a warning for events that are defined as a warning.

4.3.3.5.1.4.1.3 CLASS 3 – CAUTION

Verification that the integrated rack formats the C&W word for the listed caution events shall be by analysis and test.

Analysis of the payload safety hazard reports and payload safety review data shall identify the types of events identified as cautions that are being monitored.

The test shall use the STEP, PRCU or equivalent to determine whether or not the C&W word in the integrated rack's health and status is formatted as a caution for the events identified as cautions.

Verification shall be considered successful when the analysis shows the C&W word is formatted in accordance with paragraph 3.2.3.5, Health and Status Data, of SSP 52050 as a caution for events that are defined as a caution.

4.3.3.5.1.4.1.4 CLASS 4 – ADVISORY

Verification that integrated racks requiring advisories format the C&W word for the listed advisory events shall be by analysis and test.

Analysis of proposed payload advisories shall identify the types of events identified as advisories.

The test shall use the STEP, PRCU or equivalent to determine whether or not the C&W word in the integrated rack's health and status is formatted as an advisory for the events identified as advisories.

Verification shall be considered successful when the analysis shows the C&W word is formatted in accordance with paragraph 3.2.3.5, Health and Status Data, of SSP 52050 as a advisory for events that are defined as an advisory.

4.3.3.5.1.5 SERVICE REQUESTS

Verification of the service requests shall be by test.

The test shall consist of the reception of the integrated rack's service request by the PRCU.

Verification shall be to test the integrated rack with the PRCU, for correct test service requests.

4.3.3.5.1.6 ANCILLARY DATA

NVR

4.3.3.5.1.7 FILE TRANSFER

Verification of the file transfer data for those payloads requiring file transfer shall be by test.

The test shall consist of a test for both the request to transfer and the actual transfer of a file with the PRCU. The transmitted file shall be inspected against the received file.

Verification shall be to test the integrated rack with the PRCU, for correct test file transfer.

4.3.3.5.1.8 LOW RATE TELEMETRY

Verification of the low rate telemetry data for those payloads requiring low rate telemetry shall be by test.

The test shall consist of a test of both the request to transmit and the transmission of low rate telemetry with the PRCU. The transmitted low rate telemetry shall be inspected against the received low rate telemetry.

Verification shall be to test the integrated rack with the PRCU, for correct low rate telemetry.

4.3.3.5.1.9 DEFINED MODE CODES

Verification of the defined mode codes shall be by test.

The test shall consist of the reception by the test equipment of the integrated rack's Payload Bus Remote Terminal's response to a defined mode code transmitted by the test equipment.

Test shall be considered successful when the integrated rack's Payload Bus Remote Terminal correctly responds to the defined mode codes in a RT validation test as defined in MIL–HDBK–1553, Notice 1, Appendix A, RT Validation Test Plan.

4.3.3.5.1.10 IMPLEMENTED MODE CODES

Verification of the implemented mode codes shall be by test.

The test shall consist of the reception by the test equipment of the integrated rack's Payload Bus Remote Terminal's response to an implemented mode code transmitted by the test equipment.

Test shall be considered successful when the integrated rack's Payload Bus Remote Terminal correctly responds to the implemented mode codes in a RT validation test as defined in MIL–HDBK–1553, Notice 1, Appendix A, RT Validation Test Plan.

4.3.3.5.1.11 UNIMPLEMENTED/UNDEFINED MODE CODES

If a RT is designed to monitor for unimplemented and undefined modes codes,verification of the unimplemented and undefined mode codes shall be test.

The test shall consist of the reception by the test equipment of the integrated rack's Payload Bus Remote Terminal's response to an unimplemented/undefined mode code transmitted by the test equipment.

Verification shall be to test that the integrated rack's Payload Bus Remote Terminal correctly responds to the unimplemented and undefined mode codes produce by setting the message error bit in the status word response in a RT validation test as defined in MIL–HDBK–1553, Notice 1, Appendix A, RT Validation Test Plan.

4.3.3.5.1.12 ILLEGAL COMMANDS

If a RT is designed to monitor for illegal commands, verification of the illegal commands shall be by test.

Verification shall be to test that the integrated rack's Payload Bus Remote Terminal correctly responds to the illegal commands by setting the message error bit in the status word response in a RT validation test as defined in MIL–HDBK–1553, Notice 1, Appendix A, RT Validation Test Plan.

Verification shall be considered successful when the integrated rack's Payload Bus Remote Terminal sets the message error bit when the test equipment sends an illegal command.

4.3.3.5.2 MIL–STD–1553B LRDL INTERFACE CHARACTERISTICS

NVR

4.3.3.5.2.1 LRDL REMOTE TERMINAL ASSIGNMENT

NVR

4.3.3.5.2.1.1 LRDL CONNECTOR/PIN ASSIGNMENTS

NVR

4.3.3.5.2.1.2 MIL–STD–1553B BUS A AND B CONNECTOR/PIN ASSIGNMENT

Verification of the MIL–STD–1553B bus A connector and pin assignment shall be by inspection and test.

A. NVR. Physical mating verification requirements are specified in section 4.3.1.1.6.1.

B. Verification of P3 and P4 appropriate pin assignment shall be by inspection. The inspection shall be an inspection of payload drawings to verify that the P3 and P4 pinout matches the corresponding UIP J3 and J4 pinout respectively. The verification shall be considered successful when the inspection shows that the P3 and P4 connector pinout is appropriate.

C. Verification of the P3 and P4 connector with the requirements of SSQ 21635 shall be by inspection. The inspection shall consist of an inspection of the drawings to identify that the SSQ 21635 requirement is identified on the drawing for the P3 and P4 connectors.

Verification shall be to test the integrated rack with the PRCU, for correct test of the MIL–STD–1553B to receive and execute commands on P3 and P4 independently with various address assignments at P3 and P4.

4.3.3.5.2.1.3 DELETED

4.3.3.5.2.1.4 REMOTE TERMINAL HARDWIRED ADDRESS CODING

Verification of the RT hardwired address coding scheme shall be by test. The test shall be performed with the PRCU or equivalent to determine that the integrated rack responds to all the assigned proper RT hardwired address for the ISPR locations. The test shall be considered successful if it demonstrates that the integrated rack responds only to the assigned RT hardwired address. Each assigned location shall be tested separately.

4.3.3.5.2.2 LRDL SIGNAL CHARACTERISTICS

Verification of the MIL–STD–1553B bus A and bus B shall be by test.

The test shall consist of the measurement of the LRDL signal characteristics with the RT Validation Test Set.

Verification shall be to test the integrated rack's Payload Bus Remote Terminal with RT Validation Test Set, for correct test of the MIL–STD–1553B signal characteristics according to paragraph 4.5.2, Terminal Characteristics of MIL–STD–1553B with a MIL–STD–1553B bus analyzer as specified in MIL–HDBK–1553 Handbook, Notice 1, Appendix A, RT Validation Test Plan.

4.3.3.5.2.3 LRDL CABLING

Verification shall be by inspection of the integrated rack LRDL cable.

Verification shall be considered successful when it is shown that the integrated rack LRDL cable meets SSQ 21655, 75 ohm or equivalent.

4.3.3.5.2.4 MULTI–BUS ISOLATION

If an integrated rack's Payload Bus RT utilizes multiple ISS Payload MIL–STD–1553B data buses, verification of the isolation between the various ISS Payload MIL–STD–1553B data buses shall be by test.

The test shall consist of the measurement of the signal isolation between the multiple ISS Payload MIL–STD–1553B data buses of the integrated rack's Payload Bus Remote Terminal in a RT validation test as defined in MIL–HDBK–1553, Notice 1, Appendix A, RT Validation Test Plan.

Verification shall be considered successful when the measurement of the signal isolation between the integrated rack's Payload Bus Remote Terminal's multiple ISS Payload MIL–STD–1553B data buses is no less than 58 dB.

4.3.3.6 MEDIUM RATE DATA LINK (MRDL)

NVR

4.3.3.6.1 MRDL PROTOCOL

Verification of the MRDL LAN 1 and LAN 2 shall be by inspection and test.

Verification shall be by inspection of the integrated rack MRDL protocol to the unique integrated rack software ICD against SSP 52050 and SSP 57002.

Verification shall be to test the integrated rack with the PRCU, for correct test of the MRDL protocol per the ISO/IEC 8802–3 Pics Proforma for 10 Base T, using an Ethernet network analyzer.

4.3.3.6.1.1 INTEGRATED RACK PROTOCOLS ON THE MRDL

Verification of the integrated rack protocols length and format on the MRDL LAN 1 and LAN 2 shall be by inspection and test.

Verification shall be by inspection of the integrated rack MRDL protocol to the unique integrated rack software ICD against SSP 52050 and SSP 57002.

Verification shall be to test the integrated rack with the PRCU, for correct test of the MRDL protocol per the ISO/IEC 8802–3 Pics Proforma for 10 Base T, using an Ethernet network analyzer.

4.3.3.6.1.2 MRDL ADDRESS

Verification of the integrated rack MRDL LAN 1 and LAN 2 unique address shall be by inspection and test.

Verification shall be by inspection of the integrated rack MRDL address to the unique integrated rack hardware ICD against SSP 57001.

Verification shall be to test the integrated rack with the PRCU, for correct test of the MRDL protocol per the ISO/IEC 8802–3 Pics Proforma for 10 Base T, using an Ethernet network analyzer.

4.3.3.6.1.3 ISPR MRDL CONNECTIVITY

A. Verification of the integrated rack MRDL connectivity shall be by inspection. Inspection shall be considered successful when it is shown that the integrated rack drawings in the unique hardware ICD conform to section 3.3.3.1, Connectors, of SSP 57001.

B. Verification of MRDL data routing shall be by test. The test shall be accomplished with the PRCU or equivalent. The test shall be considered successful when it is shown that MRDL data can be successfully routed to the proper ISS LAN with the correct MRDL address.

C. For integrated racks with an internal MRDL, verification shall be by test. The test shall be accomplished with the PRCU or equivalent. The test shall be considered successful when it is shown that isolation exists between the integrated rack internal LAN and the ISS LAN.

D. Verification shall be by analysis. The analysis shall verify that the unique numbers were issued by IEEE or their representative. Verification shall be considered successful when traceability of addresses to IEEE has been shown.

4.3.3.6.1.4 MRDL CONNECTOR/PIN ASSIGNMENTS

Verification of the MRDL connector and pin assignment shall be by inspection and test.

A. NVR. Physical mating verification requirements are specified in section 4.3.1.1.6.1.

B. Verification of P46 and P47 appropriate pin assignment shall be by inspection. The inspection shall be an inspection of payload drawings to verify that the P46 and P47 pinout matches the corresponding J46 and J47 pinout. The verification shall be considered successful when the inspection shows that the P46 and P47 connector pinout is appropriate.

C. Verification of the P46 and P47 connectors with the requirements of SSQ 21635 and shall be by inspection. The inspection shall consist of an inspection of the drawings to identify that the SSQ 21635 requirement is identified on the drawing for the P46 and P47 connectors.

D. Verification of the P46 and P47 wire with the requirements of SSQ 21655 shall be by inspection. The inspection shall consist of an inspection of the drawings to identify that the 100 Ohm SSQ 21655 requirement is identified on the drawing for the P46 and P47 wiring.

Verification shall be to test the integrated rack with the PRCU, for correct test of the MRDL to protocol on P46.

Verification shall be to test the integrated rack with the PRCU, for correct test of the MRDL to protocol on P47.

4.3.3.6.1.4.1 DELETED

4.3.3.6.1.4.2 DELETED

4.3.3.6.1.5 MRDL SIGNAL CHARACTERISTICS

Verification of the MRDL LAN–1 and LAN–2 signal characteristics shall be by inspection and test.

Verification shall be by inspection of the integrated rack MRDL protocol to the unique integrated rack hardware ICD against SSP 57001.

Verification shall be to test the integrated rack with the PRCU, for correct test of the MRDL signal requirements per the ISO/IEC 8802–3 Pics Proforma for 10 Base T, using an Ethernet network analyzer.

4.3.3.6.1.6 MRDL CABLE CHARACTERISTICS

Verification shall be by inspection of the integrated rack MRDL cable.

Verification shall be considered successful when it is shown that the integrated rack MRDL cable meets SSQ 21655, 100 ohm or equivalent.

4.3.3.6.1.6.1 INSERTION LOSS

Verification of the MRDL LAN–1 and LAN–2 insertion loss shall be by test.

Verification shall be to test the integrated rack with the PRCU, for correct test of the MRDL insertion loss in accordance with paragraph 14.4.2.1 of ISO/IEC 8802–3.

4.3.3.6.1.6.2 DIFFERENTIAL CHARACTERISTIC IMPEDANCE

Verification of the MRDL LAN–1 and LAN–2 differential characteristic impedance shall be by test.

Verification shall be to test the integrated rack with the PRCU, for correct test of the MRDL differential characteristic impedance in accordance with paragraph 14.4.2.2 of ISO/IEC 8802–3.

4.3.3.6.1.6.3 MEDIUM TIMING JITTER

Verification of the MRDL LAN–1 and LAN–2 medium timing jitter shall be by test.

Verification shall be to test the integrated rack with the PRCU, for correct test of the MRDL medium timing jitter in accordance with paragraph 14.4.2.3 of ISO/IEC 8802–3.

4.3.3.7 HIGH RATE DATA LINK (HRDL)

NVR

4.3.3.7.1 PAYLOAD HRFM PROTOCOLS

NVR

4.3.3.7.2 HRDL INTERFACE CHARACTERISTICS

NVR

4.3.3.7.2.1 PHYSICAL SIGNALING

Verification of the HRDL physical signaling shall be by test and analysis.

Verification of the fiber optic transmitted waveform at the fiber optic transmitter component shall be by test. This test may be conducted at fiber optic component subassembly.

Verification of the integrated rack fiber optic transmitted waveform shall be by analysis.

Verification of the fiber optic receiver fiber optic sensitivity and bus error rate (BER) shall be by test of the fiber optic receiver component.

Verification of the integrated rack fiber optic receiver sensitivity and BER is by analysis.

BER is required of the receiver per the ANSI X3.255 test.

4.3.3.7.2.1.1 PHYSICAL SIGNALING DATE RATES

Verification of HRDL physical signaling shall be by test and analysis.

Verification of the data rate being a multiple of 0.5 Mbps shall be by test at the integrated rack.

A. Verification of the payload data rates is by test and is considered successful when the HRDL data rate is greater than or equal to 0.5 Mbps and less than or equal to the maximum negotiated data rate or 95.0 Mbps, whichever is less.

B. Verification of the payload data rates is by test and is considered successful when the HRDL data rate is in increments of 0.5 Mbps. All selectable data rates are to be recorded.

4.3.3.7.2.2 ENCODING

Verification of the HRDL encoding shall be by inspection and test.

Verification shall be by inspection of the integrated rack HRDL protocol to the unique integrated rack hardware ICD against SSP 50184 and SSP 57001.

Verification shall be to test the integrated rack with the PRCU, for correct test of the HRDL protocol.

4.3.3.7.2.3 SYMBOLS USED IN TESTING

Verification shall be by test in accordance with 4.3.3.7.4.1, Integrated Rack HRDL transmitted optical powers.

4.3.3.7.3 INTEGRATED RACK HRDL OPTICAL POWER

NVR

4.3.3.7.3.1 INTEGRATED RACK HRDL TRANSMITTED OPTICAL POWER

Verification shall be to test the integrated rack with fiber optic power meter per ANSI X3.255, for correct optical power at using the Halt symbol. The perturbations optical power from the test setup are not included in the stated power requirement. The perturbations from the test are to be documented. This test shall be considered successful when when the requirement is met or exceeded after the test setup variations are removed from the result.

4.3.3.7.3.2 INTEGRATED RACK HRDL RECEIVED OPTICAL POWER

Verification shall be to test the integrated rack with a calibrated fiber optic source using the Halt symbol at the minimum power. The perturbations optical power from the test setup are not included in the stated power requirement. The perturbations from the test are to be documented. This test shall be considered successful when the requirement is met or exceeded after the test setup variations are removed from the result.

4.3.3.7.4 HRDL FIBER OPTIC CABLE

Verification shall be by inspection of the integrated rack HRDL cable.

Verification shall be considered successful when it is shown that the integrated rack HRDL cable meets SSQ 21654 or equivalent.

4.3.3.7.5 HRDL FIBER OPTIC CABLE BEND RADIUS

Verification shall be by inspection of the integrated rack HRDL cable routing, installation and handling procedures.

Verification shall be considered successful when the inspection shows that the routing, installation and handling procedures don not cause the cable to be bent in a tighter radius.

4.3.3.7.6 HRDL CONNECTORS AND FIBER

A. NVR. Physical mating verification requirements are specified in section 4.3.1.1.6.1.

B. Verification of P7 appropriate pin assignment shall be by inspection. The inspection shall be an inspection of payload drawings to verify that the P7 pinout matches the corresponding J7 pinout. The verification shall be considered successful when the inspection shows that the P7 connector pinout is appropriate.

C. Verification that the P7 connector meets the requirements of SSQ 21635 shall be by inspection. The inspection shall consist of an inspection of the drawings to identify that the SSQ 21635 requirement is identified on the drawing for the P7 connector.

D. Verification that the HRDL fiber meets the requirements of SSQ 21635 shall be by inspection. The inspection shall consist of an inspection of the drawings to identify that the SSQ 21635 requirement is identified on the drawing for the HRDL fiber.

4.3.3.7.7 DELETED

4.3.3.8 PERSONAL COMUPTERS

NVR

4.3.3.8.1 PAYLOAD LAPTOP

A. Verification shall be by inspection. The inspection shall be of the procurement documentation from a vendor qualified to deliver laptops in accordance with JSC 27337. Verification shall be considered successful when is it shown that the payload laptop was procured from a qualified vendor (e.g. JSC PCS Project)

B. Verification shall be by inspection. An inspection of SSP 57002 shall be performed to verify compliance with the requirement. Verification shall be considered successful when the inspection shows that the laptop is utilizing the Windows NT 4.0 server software load with services and applications as specified in SSP 57002.

C. Payload Laptop displays shall be verified by demonstration. The demonstration shall be performed on the flight hardware. Verification shall be considered successful when the demonstration to the Payload Display Review Panel (PDRP) shows the requirements in SSP 50313 have been met.

D. Verification shall be by inspection. The inspection shall be of flight drawings or hardware. The verification shall be considered successful when the inspection shows that each rack has no more than one Payload Laptop.

E. Verification shall be by inspection. An inspection of flight drawings shall be performed to verify compliance with the requirements. The verification shall be considered successful when the inspection shows the connector requirements have been met.

F. Verification shall be by inspection. An inspection of flight drawings shall be performed to verify compliance with the requirement. The verification shall be considered successful when the inspection shows the cable design requirements have been met.

G. Verification shall be by inspection. An inspection of flight drawings shall be performed to verify compliance with the requirement. The verification shall be considered successful when the inspection shows the converter requirement has been met.

H. Verification shall be by inspection. An inspection of flight drawings shall be performed to verify compliance with the requirement. The verification shall be considered successful when the inspection shows the equipment is as specified.

4.3.3.8.2 PCS

A. Verification of requirements shall be by test. Software testing shall be performed by PSIV per CEA (Customer Expectation Agreement) PCS–PSIV–01. Verification shall be considered successful when PSIV software testing shows that the requirements in SSP 52052 have been met.

B. PCS displays shall be verified by demonstration. Verification shall be considered successful when the demonstration to the PDRP shows that the requirements in SSP 50313 have been met.

C. Verification shall be by inspection. The inspection shall be of flight drawings or hardware. The verification shall be considered successful when the inspection shows that each rack uses no more than one PCS.

4.3.3.8.2.1 PCS TO UOP INTERFACE

A. NVR

B. NVR

4.3.3.8.2.2 760XD LAPTOP TO RACK INTERFACE

A. Verification shall be by inspection. An inspection of flight drawings shall be performed to verify compliance with the requirements. The verification shall be considered successful when the inspection shows the connector requirements have been met.

B. Verification shall be by inspection. An inspection of flight drawings shall be performed to verify compliance with the requirement. The verification shall be considered successful when the inspection shows the cable requirements have been met.

C. Verification shall be by inspection. An inspection of flight drawings shall be performed to verify compliance with the requirement. The verification shall be considered successful when the inspection shows the converter requirement has been met.

D. Verification shall be by inspection. An inspection of flight drawings shall be performed to verify compliance with the requirement. The verification shall be considered successful when the inspection shows the equipment is as specified.

4.3.3.8.3 SSC

A. Verification shall be by inspection. The inspection shall be of flight drawings or hardware. The verification shall be considered successful when the inspection shows that each rack uses no more then one SSC.

B. SSC displays shall be verified by demonstration. The demonstration shall be performed on the flight hardware. Verification shall be considered successful when the demonstration to the Payload Display Review Panel (PDRP) shows the requirements in SSP 50313 have been met.

4.3.3.9 UOP

NVR

4.3.3.10 MAINTENANCE SWITCH, SMOKE DETECTOR, SMOKE INDICATOR, AND INTEGRATED RACK FAN INTERFACES

NVR

4.3.3.10.1 RACK MAINTENANCE SWITCH (RACK POWER SWITCH) INTERFACES

Verification of the rack maintenance switch interface shall be by inspection and test.

Verification shall be by inspection of the integrated rack maintenance switch interface to the unique integrated rack hardware ICD against and SSP 57001.

Verification shall be to test the integrated rack with the PRCU, for correct operation of the rack maintenance switch.

4.3.3.10.2 SMOKE DETECTOR INTERFACES

Verification of the smoke detector interface shall be by inspection.

Verification shall be by inspection of the smoke detector interfaces are powered from the integrated rack to the unique integrated rack hardware ICD against and SSP 57001.

4.3.3.10.2.1 ANALOG INTERFACE CHARACTERISTICS

Verification of the analog interface characteristics shall be by inspection.

Verification shall be by inspection of the analog interface characteristics to the unique integrated rack hardware ICD against and SSP 57001.

4.3.3.10.2.2 DISCRETE COMMAND BUILT-IN-TEST INTERFACE CHARACTERISTICS

Verification of the discrete command BIT interface characteristics shall be by inspection.

Verification shall be by inspection of the discrete command BIT interface characteristics to the unique integrated rack hardware ICD against and SSP 57001.

4.3.3.10.2.3 SMOKE INDICATOR ELECTRICAL INTERFACES

Verification of the smoke indicator electrical interface shall be by inspection and test.

Verification shall be by inspection of the discrete command BIT interface characteristics to the unique integrated rack hardware ICD against and SSP 57001.

Verification shall be to test the integrated rack with the PRCU, for function of the smoke indicator on P43. No test on the luminance of the indicator is required.

4.3.3.10.2.4 FAN VENTILATION STATUS ELECTRICAL INTERFACES

Verification of the discrete command BIT interface characteristics shall be by inspection.

Verification shall be by inspection of the discrete command BIT interface characteristics to the unique integrated rack hardware ICD against and SSP 57001.

4.3.3.10.3 RACK MAINTENANCE SWITCH (RACK POWER SWITCH)/FIRE DETECTION SUPPORT INTERFACE CONNECTOR

Verification of the rack maintenance switch/fire detection support interface (maintenance) connector shall be by inspection.

Verification shall be by inspection of the integrated rack maintenance connector to mate with a test connector SSQ 21635, NATC07T13N35SA.

A. NVR. Physical mating verification requirements are specified in section 4.3.1.1.6.

B. Verification of P43 appropriate pin assignment shall be by inspection. The inspection shall be an inspection of payload drawings to verify that the P43 pinout matches the corresponding J43 pinout. The verification shall be considered successful when the inspection shows that the P43 connector pinout is appropriate.

C. Verification of the P43 connector with the requirements of SSQ 21635 shall be by inspection. The inspection shall consist of an inspection of the drawings to identify that the SSQ 21635 requirement is identified on the drawing for the P43 connector.

4.3.4 PAYLOAD NTSC VIDEO AND AUDIO INTERFACE REQUIREMENTS

NVR

4.3.4.1 PAYLOAD NTSC VIDEO INTERFACE REQUIREMENTS

4.3.4.1.1 PAYLOAD NTSC VIDEO SIGNAL CHARACTERISTICS

Verification of this requirement is satisfied by performing the test requirement of 4.4.1.2.1. PFM NTSC Fiber Optic Video Characteristics and/or 4.4.1.3.1, NTSC Electrical Video Characteristics.

4.3.4.1.2 NTSC FIBER OPTIC VIDEO

NVR

4.3.4.1.2.1 PAYLOAD NTSC VIDEO CHARACTERISTICS

Verification shall be to test the integrated rack with a video test system in accordance with EIA/TIA–250–C, End to End NTSC Video for Satellite Transmission System per the paragraphs specified in Table 1, NTSC Video Performance Characteristics while receiving the PFM NTSC Fiber Optic Video Characteristics and Table 3.4.1.2–1, NTSC Fiber Optic Video Characteristics.

4.3.4.1.2.2 INTEGRATED RACK NTSC PFM VIDEO TRANSMITTED OPTICAL POWER

Verification shall be to test the integrated rack with fiber optic power meter. The perturbations optical power from the test setup are not included in the stated power requirement. The perturbations from the test are to be documented. This test shall be considered successful when when the requirement is met or exceeded after the test setup variations are removed from the result.

4.3.4.1.2.3 INTEGRATED RACK NTSC PFM VIDEO AND SYNC SIGNAL RECEIVED OPTICAL POWER

Verification shall be to test the integrated rack with a calibrated fiber optic source testing at the minimum power. The perturbations optical power from the test setup are not included in the stated power requirement. The perturbations from the test are to be documented. This test shall be considered successful when the requirement is met or exceeded after the test setup variations are removed from the result.

4.3.4.1.2.4 NTSC ELECTRICAL VIDEO CHARACTERISTICS

Verification shall be by inspection of the integrated rack fiber optic video cable. Verification shall be considered successful when it is shown that the integrated rack fiber optic video cable meets 3.4.1.2.5, Optical Video Fiber Characteristics.

4.3.4.1.2.5 PFM NTSC VIDEO FIBER OPTIC CABLE BEND RADIUS

Verification shall be by inspection of the integrated rack PFM NTSC video fiber optic cable routing, installation and handling procedures.

Verification shall be considered successful when the inspection shows that the routing, installation and handling procedures don not cause the cable to be bent in a tighter radius.

4.3.4.1.2.6 DELETED

4.3.4.1.2.7 PFM NTSC OPTICAL CONNECTOR/PIN ASSIGNMENTS

A. NVR. Physical mating verification requirements are specified in section 4.3.1.1.6.1.

B. Verification of P16 appropriate pin assignment shall be by inspection. The inspection shall be an inspection of payload drawings to verify that the P16 pinout matches the corresponding J16 pinout. The verification shall be considered successful when the inspection shows that the P16 connector pinout is appropriate.

C. Verification of the P16 connector with the requirements of SSQ 21635 shall be by inspection. The inspection shall consist of an inspection of the drawings to identify that the SSQ 21635 requirement is identified on the drawing for the P16 connector.

4.3.4.1.3 NTSC ELECTRICAL VIDEO INTERFACES

4.3.4.1.3.1 NTSC ELECTRICAL VIDEO CHARACTERISTICS

(TBD #17)

4.3.4.1.3.2 DELETED

4.3.4.1.4 NTSC ELECTRICAL CONNECTOR/PIN ASSIGNMENTS

A. NVR. Physical mating verification requirements are specified in section 4.3.1.1.6.1.

B. Verification of P77 appropriate pin assignment shall be by inspection. The inspection shall be an inspection of payload drawings to verify that the P77 pinout matches the corresponding J77 pinout. The verification shall be considered successful when the inspection shows that the P77 connector pinout is appropriate.

C. Verification of the P77 connector with the requirements of SSQ 21635 shall be by inspection. The inspection shall consist of an inspection of the drawings to identify that the SSQ 21635 requirement is identified on the drawing for the P77 connector.

4.3.4.2 U.S. ELEMENT AUDIO INTERFACE REQUIREMENTS

NVR

4.3.5 THERMAL CONTROL INTERFACE REQUIREMENTS

4.3.5.1 INTERNAL THERMAL CONTROL SYSTEM (ITCS) INTERFACE REQUIREMENTS

4.3.5.1.1 PHYSICAL INTERFACE

A. NVR. Physical mating verification requirements are specified in section 4.3.1.1.6.1.

B. NVR. Physical mating verification requirements are specified in section 4.3.1.1.6.1.

4.3.5.1.2 ITCS FLUID USE AND CHARGING

A. ITCS Fluid Use

Verification that the coolant contained in the integrated rack interfacing with ITCS coolant satisfies the TCS coolant verification test requirements specified in SSP 30573 shall be by test. The verification shall be considered successful if the test results show the integrated rack coolant meets the TCS coolant requirements in SSP 30573.

B. Integrated Rack Charging

Verification of integrated rack charging shall be by analysis and certificate of compliance stating the amount of coolant charged into the Integrated rack allows for thermal expansion during transport. The verification shall be considered successful if the amount of coolant charged into the integrated rack allows for thermal expansion when expose to the temperature range encountered during transport.

4.3.5.1.3 ITCS PRESSURE DROP

Verification that the pressure differential measured across the ITCS supply and return interfaces for the flow rates in the range to be used in flight shall be by test with both halves of each mated QD pair included as part of the payload pressure differential. A curve of flow rate versus pressure drop will be generated for each flow configuration and mode of operation. The verification shall be considered successful if the test results are within the pressure drop requirements specified in SSP 57001, paragraph 3.5.1.2.

4.3.5.1.4 COOLANT FLOW RATE

Verification of compatibility with the design flow rate shall be by analysis or test using the Payload Rack Checkout Unit (PRCU) or equivalent test equipment. The payload developer shall provide the PRCU or equivalent test equipment flow rate measurements for all modes of

operations. The verification shall be considered successful if the analysis or test results provide the integrated rack flow rate measurements for all modes of operation at or below the coolant flow rate limits specified in SSP 57001, paragraph 3.5.1.3.

4.3.5.1.5 COOLANT SUPPLY TEMPERATURE

Verification is not required.

4.3.5.1.6 COOLANT RETURN TEMPERATURE

A. Verification that the initial configuration of the integrated rack moderate differential return temperature is above the minimum allowable shall be verified by test and analysis. The test shall utilize a PRCU (or equivalent) to measure the differential temperature for the minimum, maximum and nominal power modes of the integrated rack. Analysis shall be used to account for any on-orbit modifications of equipment, using a thermal model adjusted with the results from the integrated rack return temperature testing, to verify that the changes in equipment satisfy the minimum differential temperature. The verification shall be considered successful when the initial test and subsequent analysis show that the moderate differential return temperature is above the minimum allowable.

B. Verification that the integrated rack using moderate temperature coolant is designed to operate using 100 lbm/hr flow during modes of operation which require less than 1025 watts of power shall be verified by analysis. The verification shall be considered successful when the analysis shows that the integrated rack using moderate temperature coolant is designed to operate using 100 lbm/hr flow during operating modes which require less than 1025 watts of power.

C. Verification that the initial configuration of the integrated rack moderate TCS return temperature does not exceed the maximum specified temperature shall be verified by test and analysis. The test shall utilize a PRCU (or equivalent) to measure the outlet temperature for the maximum and nominal power modes of the integrated rack. Analysis shall be used to account for any on-orbit modifications of equipment, using a thermal model adjusted with the results from the integrated rack return temperature testing, to verify that the changes in equipment do not exceed the allowable return temperature. The verification shall be considered successful when the initial test and subsequent analysis show that the moderate temperature return limit is not exceeded.

D. Verification that the initial configuration of the integrated rack low TCS return temperature does not exceed the maximum specified temperature shall be verified by test and analysis. The test shall utilize a PRCU (or equivalent) to measure the outlet temperature for the maximum and nominal power modes of the integrated rack. Analysis shall be used to account for any on-orbit modifications of equipment, using a thermal model adjusted with the results from the integrated rack return temperature testing, to verify that the changes in equipment do not exceed the allowable return temperature. The verification shall be considered successful when the initial test and subsequent analysis show that the low temperature return limit is not exceeded.

4.3.5.1.7 COOLANT MAXIMUM DESIGN PRESSURE

A. Moderate Temperature Loop

The pressure integrity of integrated rack volumes connected to the TCS moderate temperature loop shall be verified by performing a leak–check of the pressure system. The verification shall be considered successful if the test results show the integrated rack passes the leak–check performed at a minimum of 1.0 x MDP per SSP 52005, paragraph 5.1.3.

B. Low Temperature Loop

The pressure integrity of integrated rack volumes connected to the TCS low temperature loop shall be verified by performing a leak–check of the pressure system. The verification shall be considered successful if the test results show the integrated rack passes the leak–check performed at a minimum of 1.0 x MDP per SSP 52005, paragraph 5.1.3.

C. MPLM Temperature Loop

The pressure integrity of integrated rack volumes connected to the MPLM active thermal control subsystem shall be verified by performing a leak–check of the pressure system. The verification shall be considered successful if the test results show the integrated rack passes the leak–check performed at a minimum of 1.0 x MDP per SSP 52005, paragraph 5.1.3.

4.3.5.1.8 FAIL SAFE DESIGN

Verification that payload equipment and rack internal water loop piping utilizing the Space Station or payload-provided heat rejection system(s) is fail safe in the case of loss of cooling under all modes of operation and will not result in over-temperature, over-pressurization, fire, explosion, release of hazardous or toxic materials or damage that could propagate to other systems shall be by analysis. If loss of cooling results in a hazard, the controls for shutdown must be verified by test. The verification shall be considered successful if the analysis and/or test results show the integrated rack satisfies the fail safe design criteria.

4.3.5.1.9 LEAKAGE

A. Verification that each ITCS fluid loop including all payload equipment and connections as well as the supply and return interfaces and connections at the utility interface panel does not exceed the leakage requirement shall be by test. The leakage test shall be performed at MDP or above. If helium, or some other medium, is used in testing, the results shall be converted to an equivalent water leakage. The verification shall be considered successful if the test results show the integrated rack leakage rate to be equal to or less than 14×10^{-3} scc/hr of liquid per each thermal loop.

NOTE: A conversion factor of 1 scc/hr of water = 233 scc/hr of helium at a pressure of 121 psia shall be used when converting helium leakage to an equivalent water leakage.

B. Verification that the ITCS fluid loop including all payload equipment and connections as well as the supply and return interfaces and connections at the utility interface panel does not exceed the leakage requirement shall be by test. The leakage test shall be performed at MDP or above. If helium, or some other medium, is used in testing, the results shall be converted to an equivalent water leakage. The verification shall be considered successful if the test results show the integrated rack leakage rate to be equal to or less than 9×10^{-3} scc/hr of liquid.

NOTE: A conversion factor of 1 scc/hr of water = 386 scc/hr of helium at a pressure of 210 psia shall be used when converting helium leakage to an equivalent water leakage.

4.3.5.1.10 QUICK-DISCONNECT AIR INCLUSION

Verification that air inclusion into the QD during coupling and uncoupling does not exceed 0.3 cc per couple/uncouple cycle shall be by test or analysis of QD certification data. If air is not used in testing of the QD, the results shall be converted to an equivalent volume of air. The verification shall be considered successful if the test results show the integrated rack QD air inclusion does not exceed 0.3 cc per couple/uncouple cycle.

4.3.5.1.11 RACK FRONT SURFACE TEMPERATURE

Verification that the average rack front surface temperature and maximum temperature limits will not be exceeded during all modes of operation shall be by analysis or test. The verification shall be considered successful when the analysis or test results show the integrated rack surface average and maximum limit temperatures are less than those specified.

4.3.5.1.12 CABIN AIR HEAT LEAK

Verification that the cabin air heat leak does not exceed the limits specified in SSP 57001, paragraph 3.5.1.9 shall be by analysis. The verification shall be considered successful if the analysis results show the integrated rack does not exceed the cabin air heat leak limits.

4.3.5.1.13 MPLM CABIN AIR COOLING

Verification that the cabin air heat load absorbed by the Integrated racks in the MPLM does not exceed the limits specified in paragraph 3.5.1.13 shall be by analysis. The verification shall be considered successful if the analysis results show the integrated racks do not exceed the cabin air heat load absorption limit.

4.3.5.1.14 SIMULTANEOUS COOLING

A. Verification of simultaneous flow requirements shall be by analysis. The verification shall be considered successful when the analysis results show the integrated rack meets the interfaces for simultaneous flow specified in SSP 57001 paragraph 3.5.1.6.

B. Verification that the moderate temperature loop and low temperature loop coolant flow does not mix together shall be verified by inspecting the engineering drawings. The verification shall be considered successful when the inspection shows the integrated rack thermal systems flow do not mix.

4.3.5.1.15 CONTROL SYSTEM TIME CONSTANT

Verification that the payload control system time constant is of the specified duration shall be by test. The verification shall be considered successful if the test results show the integrated rack time constant for set point changes resulting in flow rate changes greater than five pounds mass flow per hour (5 lbm/hr) shall take the specified time to reach 63.2% (i.e., $1–e^{-1}$) of the commanded change in flow rate.

4.3.5.1.16 PAYLOAD COOLANT QUANTITY

Verification that the maximum allowable payload coolant quantity is not exceed shall be by test or analysis of the payload design drawings. The verification shall be considered successful if the test or analysis results show the integrated rack coolant quantity to be within the limits specified in SSP 57001, paragraph 3.5.1.7.

4.3.5.1.17 PAYLOAD GAS INCLUSION

Verification that the maximum allowable payload gas inclusion or volume limit is not exceed shall be by analysis of the payload design drawings. The verification shall be considered successful if the analysis results show the integrated rack gas inclusion amount to be within the limits specified in SSP 57001, paragraph 3.5.1.8.

4.3.6 VACUUM SYSTEM REQUIREMENTS

4.3.6.1 VACUUM EXHAUST SYSTEM REQUIREMENTS

4.3.6.1.1 VES PHYSICAL INTERFACE

NVR. Physical mating verification requirements are specified in section 4.3.1.1.6.1.

4.3.6.1.2 INPUT PRESSURE LIMIT

A. Integrated rack vented gas pressure shall be verified by test and analysis. The test shall utilize a PRCU or equivalent to measure the vented gas pressure at the interface plane. The integrated rack volumes that are connected to ISS VES/WGS shall be pressurized to the expected experiment pressures for the test.

B. The MDP of integrated rack volumes connected to the VES shall be verified by the test and analysis guidelines identified in SSP 52005, paragraph 5.1.3

C. An analysis shall determine whether or not the payload system (including the experiment chamber) connected to the ISS VES/WGS system provides a two fault tolerant design to prevent venting gases at pressures greater than 276 kPa (40 psia) at the rack to station interface. Verification shall be considered successful when the analysis shows the payload system provides a two fault tolerant design to prevent venting gases to the ISS VES/WGS system at pressures greater than 276 kPa (40 psia) at the rack to station interface.

4.3.6.1.3 INPUT TEMPERATURE LIMIT

A. Integrated rack temperature shall be verified by test. The test shall utilize a PRCU or equivalent to measure the temperature at the interface plane. The integrated rack volumes that are connected to VES shall be pressurized to the expected pressures for the test. The experiment shall be subjected to the same heat generating operations that will be experienced on-orbit and vented at the same relative time during the experiment operation as would be experienced on-orbit.

4.3.6.1.4 INPUT DEWPOINT LIMIT

Integrated rack dewpoint shall be verified by test. The test shall utilize a PRCU or equivalent to measure the dewpoint at the interface plane. The integrated rack volumes that are connected to VES shall be pressurized to the expected pressures for the test. The experiment shall be subjected to the same operations that will be experienced on-orbit and vented at the same relative time during the experiment operation as would be experienced on-orbit.

4.3.6.1.5 ACCEPTABLE EXHAUST GASES (TBR #7)

A. Verification that exhaust gases vented into the Vacuum Exhaust System/Waste Gas System (VES/WGS) of the USL, APM, and JEM are compatible with the wetted surface materials of the respective laboratory(ies) in which the integrated rack will operate shall be by analysis or test. Gases documented in Appendix D have been analyzed for compatibility with the ISS VES/WGS wetted materials. The integrated rack provider shall submit a complete list of all proposed vent gas constituents, initial volume, concentration, temperature and pressure to the ISS program. The list submitted shall also identify which exhaust gases will be vented together and shall include the products of any reactions

determined in 3.6.1.5 B. The ISS module integrator will analyze the list of vent gases not specified in Appendix D and the VES/WGS wetted surface materials to determine whether or not the proposed exhaust gases are compatible with the ISS VES/WGS wetted materials. The ISS Program will evaluate and conduct a test, if necessary for gases that do not have compatibility documentation to determine whether or not the proposed exhaust gases are compatible with the VES/WGS wetted surface materials. The payload developer shall review the integrated racks proposed vent gases and determine whether or not the gases are listed as acceptable in Appendix D or on the report provided by the program in the stage analysis. Verification shall be considered successful when the proposed exhaust gases are shown to be compatible with the ISS VES/WGS wetted surface materials of the respective laboratory(ies) in which the integrated rack will operate as specified in Appendix D or in the analysis report from the ISS program. The verification process performed by the ISS program is documented in SSP 57011, Figure 3.4.11–9.

Note: This analysis/test will consider flammability, pitting and general corrosion, and degradation and swelling of seal materials. An analysis will consist of a literature search that will review technical documentation for documented compatibility of exhaust gases with the wetted materials listed in SSP 41002, paragraph 3.3.7.2. Materials and gases will be considered compatible if the documentation shows one of the following: existing use of the material in a system containing the gas in question, test data showing compatibility, or general materials information stating compatibility. For exhaust gases where no technical data showing compatibility is found, a test will be conducted. The test will review material weight loss, wetted material surface changes, soft material swelling and wetted material trace contaminate inclusion in the test gases after exposure to the materials.

B. Verification that integrated rack gases vented to the ISS VES/WGS are non–reactive with other vent gas mixture constituents shall be by analysis. An analysis shall determine what gases will be vented to the ISS VES/WGS and, assuming the worst case reactions possible, shall determine all reactions that are possible among the vent gas constituents. An analysis shall calculate the worst case temperature change associated with the possible vent gas reactions in accordance with the equation :

$$20 \geq \frac{\Sigma_{\text{ALL REACTIONS}} \left[\left[\frac{(\Sigma x_p H_p - \Sigma x_{r1} H_r)}{n_{lim}} \right] m_{lim} \right]}{\Sigma x_p m_p c_{pp} + \Sigma x_{r2} m_r c_{pr} + \Sigma x_d m_d c_{pd}}$$

H_p = Enthalpy of formation of the products (J/mol)
H_r = Enthalpy of formation of the reactants (J/mol)
X_{r1} = Number of moles of the reactants
X_{r2} = Number of moles of the unreacted reactants
X_p = Number of moles of the products
X_d = Number of moles of the diluent

n_{lim}	=	Molecular Weight of the limiting reactant in the reaction (g/mol)
m_{lim}	=	Mass of the limiting reactant in the reaction (g)
m_p	=	Mass of each product gas in the vent mixture (g)
m_r	=	Mass of each unreacted reactant gas in the vent mixture (g)
m_d	=	Mass of each diluent gas in the vent mixture (g)
c_{pp}	=	Constant Pressure Heat Capacity of each product gas at the vented condition (J/(g*K))
c_{pr}	=	Constant Pressure Heat Capacity of each unreacted gas at the vented condition (J/(g*K))
c_{pd}	=	Constant Pressure Heat Capacity of each diluent gas at the vented condition (J /(g*K))

Note: The exact equation used may vary slightly depending on the units of the data available for the given gases. These variations shall be limited to units conversions only. The final units of the equation should be a measure of temperature, measured in Celsius or Kelvin.

For each possible reaction in the vent gas mixture, all gases associated with the reaction shall be included in the calculation in the numerator. All possible reactions in the vent gases mixture shall be calculated and summed together in the numerator. All gases in the vented mixture should be included in the denominator of the analysis. Unreacted reactants may be summed in the denominator as a diluent, when rich or lean mixtures are expected for a given reaction. When lean or rich mixtures are expected for one reaction, an anlysis shall show that the excess reactant gases will not react with another gas in the vent mixture (the original reaction considered should be the worst case, i.e. most energy released, reaction).

If trace elements (up to the SMAC value) are present and do not participate in a reaction, they may be excluded from this analysis.

Verification shall be considered successful when the analysis shows the gases vented to the ISS VES/WGS are non–reactive according to the equation specified above (the equation meets the inequality).

Note: Venting of cabin air or the ISS pressurized gases, Nitrogen, Carbon Dioxide, Argon or Helium, or mixtures of these gases are considered acceptable and do not require verification if they are not mixed with other gases.

C. Verification that integrated racks venting to the ISS VES/WGS provide a means of removing gases that would adhere to the VES/WGS tubing walls at a wall temperature of 4°C (40°F) and a pressure of 10 (–3) torr shall be by analysis. An analysis shall determine whether or not the gas mixture contains gases with a molecular weight greater than 75 amu or gases which have a boiling point greater than 100°C (212°F) at atmospheric pressure.

Each proposed vent gas with a molecular weight greater than 75 amu or a boiling point greater than 100°C (212°F) at atmospheric pressure shall be analyzed to determine whether or not the

vapor pressure is below a pressure of 10 (–3) torr at 4°C (40°F). This analysis shall be conducted gas–by–gas. If any proposed vent gases are determined to have a vapor pressure below 10 (–3) torr at 4°C (40°F), an analysis shall be conducted to determine whether or not the integrated rack provides a means to remove these gases from the vent gas mixture prior to venting to the ISS VES/WGS.

Or alternatively, each proposed vent gas with a molecular weight greater than 75 amu or a boiling point greater than 100°C (212°F) at atmospheric pressure shall be analyzed to determine whether or not the boiling temperature is above 4°C (40°F) at a pressure of 10 (–3) torr. This analysis shall be conducted gas–by–gas. If any proposed vent gases are determined to have a boiling temperature above 4°C (40°F) at 10 (–3) torr, an analysis shall be conducted to determine whether or not the integrated rack provides a means to remove these gases from the vent gas mixture prior to venting to the ISS VES/WGS.

The Clausius–Clapeyron equation or Antoines equation may be used to verify this requirement. Note that it is not required to use these equations, but they may be helpful.

Verification shall be considered successful when the analysis shows the gases that will be exposed to the ISS VES/WGS will not adhere to the ISS VES/WGS tubing walls at a wall temperature of 4°C (40°F) at 10 (–3) torr. Gases that will be exposed to the ISS VES/WGS will not adhere to the ISS VES/WGS tubing walls when each vent gas is shown to have a vapor pressure above 10 (–3) torr ar 4°C (40°F) or a boiling temperature below 4°C (40°F) at a pressure of 10 (–3) torr and /or, any gases found with a vapor pressure below 10 (–3) torr at 4°C (40°F) or a boiling temperature above 4°C (40°F) at a pressure of 10 (–3) torr are removed from the gas mixture.

Note: Cabin air and the ISS Pressurized gases, nitrogen, argon, helium and carbon dioxide, may be vented to the ISS VES/WGS without verification of this requirement.

D. Verification that integrated racks venting to the ISS VES/WGS remove particulates from vent gases that are larger than 100 micrometers shall be by analysis. An analysis shall determine whether or not the vent gases will contain particulate contamination larger than 100 microns. Should the anlysis show that particulate contamination greater than 100 microns will be introduced into, or generated in, the vent gases, an analysis shall determine whether or not a means or removing the particles above 100 microns before venting to the ISS VES/WGS is included in the integrated rack design. Verification shall be considered successful when the analysis shows the vent gases will not contain particulate contamination greater than 100 microns.

Note: ISS Cabin Atmosphere and the ISS Pressurized gases, nitrogen, argon, helium and carbon dioxide, may be vented to the ISS VES/WGS in the condition delivered to the integrated rack if it’s shown that particulate contamination is not generated within the integrated rack.

4.3.6.1.5.1 ACCEPTABLE GASES – INITIAL LIST

A. NVR

B. NVR

C. NVR

4.3.6.1.5.2 EXTERNAL CONTAMINATION CONTROL

Verification shall be by analysis. The integrated rack provider shall submit the list of vented gas constituents, volume, initial temperature and pressure to the ISS program. The verification shall be considered successful when the Environments Team verifies that the vented gases do not exceed the external contamination limits in the specified section of SSP 30426.

4.3.6.1.5.3 INCOMPATIBLE GASES

Verification shall be by inspection and analysis. The inspection shall consist of verification that gas containment volume is provided for incompatible gases. The analysis shall verify that the containment volume is sufficient to contain the gas and complies with the pressure vessel requirements identified in SSP 52005, paragraph 5.1.3. The method of transportation of containment volume from on-orbit to ground shall be identified.

4.3.6.2 VACUUM RESOURCE SYSTEM REQUIREMENTS

4.3.6.2.1 VRS PHYSICAL INTERFACE

NVR. Physical mating verification requirements are specified in section 4.3.1.1.6.1.

4.3.6.2.2 INPUT PRESSURE LIMIT

4.3.6.2.3 VRS THROUGH-PUT LIMIT

The throughput to the VRS shall be verified by the test. The test shall utilize a PRCU or equivalent to measure the vented gas throughput at the interface plane.

4.3.6.2.4 ACCEPTABLE EXHAUST GASES

NVR

4.3.7 PRESSURIZED GASES INTERFACE VERIFICATION REQUIREMENTS

4.3.7.1 NITROGEN INTERFACE VERIFICATION REQUIREMENTS

4.3.7.1.1 NITROGEN INTERFACE CONTROL

Verification of nitrogen flow control shall be by test. The verification shall be considered successful when the test results confirm that the integrated rack can turn on and off the flow of nitrogen and can control the flow to not exceed the maximum allowable nitrogen flow rate when connected to nitrogen supplied at the maximum and minimum of the specified pressure range.

4.3.7.1.2 NITROGEN INTERFACE PRESSURE

The MDP of integrated rack volumes connected to the Nitrogen system shall be verified by the test and analysis guidelines identified in SSP 52005, paragraph 5.1.3. The verification shall be considered successful if the test results show the integrated rack passes the proof-pressure test.

4.3.7.1.3 NITROGEN INTERFACE TEMPERATURE

Verification that the integrated rack nitrogen system is compatible with the nitrogen interface temperature range shall be by test or analysis or both. The verification shall be considered successful when review of nitrogen system components, including component qualification data packs or test results, show that the integrated rack nitrogen system is compatible with the nitrogen temperature range specified.

4.3.7.1.4 NITROGEN LEAKAGE

Verification of integrated rack nitrogen leakage shall be by test. The verification shall be considered successful when the test results show that the sum of all potential leakage sources from the standoff UIP panel connection to the point to nitrogen flow control in the integrated rack does not exceed the allowable leakage rate.

4.3.7.1.5 NITROGEN INTERFACE CONNECTION

NVR. Physical mating verification requirements are specified in section 4.3.1.1.6.1.

4.3.7.2 ARGON INTERFACE VERIFICATION REQUIREMENTS

4.3.7.2.1 ARGON INTERFACE CONTROL

Verification of argon flow control shall be by test. The verification shall be considered successful when the test results confirm that the integrated rack can turn on and off the flow of argon and can control the flow to not exceed the maximum allowable argon flow rate when connected to argon supplied at the maximum and minimum of the specified pressure range.

4.3.7.2.2 ARGON INTERFACE MDP

The MDP of integrated rack volumes connected to the Argon system shall be verified by the test and analysis guidelines identified in SSP 52005, paragraph 5.1.3. The verification shall be considered successful if the test results show the integrated rack passes the proof-pressure test.

4.3.7.2.3 ARGON INTERFACE TEMPERATURE

Verification that the integrated rack argon system is compatible with the argon interface temperature range shall be by test or analysis or both. Verification shall be considered successful when review of the argon system components, including component qualification data packs, or test results, show that the integrated rack argon system is compatible with the argon temperature range specified.

4.3.7.2.4 ARGON LEAKAGE

Verification of integrated rack argon leakage shall be by test. Verification shall be considered successful when the test results show that the sum of all potential leakage sources from the standoff UIP panel connection to the point to argon flow control in the integrated rack does not exceed the allowable leakage rate.

4.3.7.2.5 ARGON INTERFACE CONNECTION

NVR. Physical mating verification requirements are specified in section 4.3.1.1.6.1.

4.3.7.3 CARBON DIOXIDE INTERFACE VERIFICATION REQUIREMENTS

4.3.7.3.1 CARBON DIOXIDE INTERFACE CONTROL

Verification of carbon dioxide flow control shall be by test. The verification shall be considered successful when the test results confirm that the integrated rack can turn on and off the flow of carbon dioxide and can control the flow to not exceed the maximum allowable carbon dioxide

flow rate when connected to carbon dioxide supplied at the maximum and minimum of the specified pressure range.

4.3.7.3.2 CARBON DIOXIDE INTERFACE PRESSURE

The MDP of integrated rack volumes connected to the Carbon Dioxide system shall be verified by the test and analysis guidelines identified in SSP 52005, paragraph 5.1.3. The verification shall be considered successful if the test results show the integrated rack passes the proof-pressure test.

4.3.7.3.3 CARBON DIOXIDE INTERFACE TEMPERATURE

Verification that the integrated rack carbon dioxide system is compatible with the carbon dioxide interface temperature range shall be by test or analysis or both. The verification shall be considered successful when review of carbon dioxide system components, including qualification data packs, test results, show that the integrated rack carbon dioxide system is compatible with the carbon dioxide temperature range specified.

4.3.7.3.4 CARBON DIOXIDE LEAKAGE

Verification of integrated rack carbon dioxide leakage shall be by test. The verification shall be considered successful when the test results show that the sum of all potential leakage sources from the standoff UIP panel connection to the point to carbon dioxide flow control in the integrated rack does not exceed the allowable leakage rate.

4.3.7.3.5 CARBON DIOXIDE INTERFACE CONNECTION

NVR. Physical mating verification requirements are specified in section 4.3.1.1.6.1.

4.3.7.4 HELIUM INTERFACE VERIFICATION REQUIREMENTS

4.3.7.4.1 HELIUM INTERFACE CONTROL

Verification of helium flow control shall be by test. The verification shall be considered successful when the test results confirm that the integrated rack can turn on and off the flow of helium and can control the flow to not exceed the maximum allowable helium flow rate when connected to helium supplied at the maximum and minimum of the specified pressure range.

4.3.7.4.2 HELIUM INTERFACE MDP

The MDP of integrated rack volumes connected to the Helium system shall be verified by the test and analysis guidelines identified in SSP 52005, paragraph 5.1.3. The verification shall be considered successful if the test results show the integrated rack passes the proof-pressure test.

4.3.7.4.3 HELIUM INTERFACE TEMPERATURE

Verification that the integrated rack helium system is compatible with the helium interface temperature range shall be by test or analysis or both. Verification shall be considered successful when review of helium system components, including component qualification data packs, test results, show that the integrated rack helium system is compatible with the helium temperature range specified.

Verification that the integrated rack helium system is compatible with the helium interface temperature range shall be by test or analysis or both. Verification shall be considered successful when review of helium system components, including component qualification data packs, test results, show that the integrated rack helium system is compatible with the helium temperature range specified.

4.3.7.4.4 HELIUM LEAKAGE

Verification of integrated rack helium leakage shall be by test. Verification shall be considered successful when the test results show that the sum of all potential leakage sources from the standoff UIP panel connection to the point to helium flow control in the integrated rack does not exceed the allowable leakage rate specified.

4.3.7.4.5 HELIUM INTERFACE CONNECTION

NVR. Physical mating verification requirements are specified in section 4.3.1.1.6.1.

4.3.7.5 PRESSURIZED GAS BOTTLES

Verification of the maximum allowable leak rate for pressurized gas bottles transported in the MPLM shall be by analysis. The verification shall be considered successful when the analysis shows that the bottle design will limit the flow to not exceed maximum allowable amount specified.

4.3.7.6 MANUAL VALVES

Verification that manual valves used to control the flow of pressurized gases are accessible without rack rotation shall be by inspection. Verification shall be considered successful when inspection of the flight article shows that the manual valve is accessible for manual operation without having to rotate the rack and that the clearance around the valves meets the requirements specified in paragraph 3.12.5.1.

4.3.8 PAYLOAD SUPPORT SERVICES INTERFACES VERIFICATION REQUIREMENTS

4.3.8.1 POTABLE WATER

NVR

4.3.8.1.1 POTABLE WATER INTERFACE CONNECTION

NVR. Physical mating verification requirements are specified in section 4.3.1.1.6.1.

4.3.8.1.2 POTABLE WATER INTERFACE PRESSURE

Verification that the payload-provided container, and all hoses, tubing, and connectors used with the ISS potable water interface, do not leak when exposed to the ISS potable water interface pressure specified shall be by test. The verification shall be considered successful when the test shows that the container, and all hoses, tubing, and connectors used with the ISS potable water interface, do not visibly leak liquid water when pressurized to the maximum water pressure specified.

4.3.8.1.3 POTABLE WATER USE

A. Verification that the integrated rack use of water from the ISS water system that is not returned to the cabin air as humidity does not exceed the specified amount shall be by analysis. The verification shall be successful when the analysis shows that the total use of water that is not returned to the cabin air as humidity does not exceed the specified amount.

B. Verification that the integrated rack total water use from the ISS water system shall be by analysis. The verification shall be successful when the analysis shows that the total use of water does not exceed the specified amount.

4.3.8.2 FLUID SYSTEM SERVICER

The rack integrator shall verify by demonstration or inspection that the integrated rack interfaces with the Fluid System Services.

4.3.9 ENVIRONMENT INTERFACE VERIFICATION REQUIREMENTS

4.3.9.1 ATMOSPHERE REQUIREMENTS

4.3.9.1.1 PRESSURE

Verification of this requirement shall be according to NSTS 13830, the verification shall be submitted to the PSRP per NSTS 13830. Verification shall be considered successful when hazard reports and safety data presented to the PSRP during the phased safety reviews are approved.

4.3.9.1.2 TEMPERATURE

Verification of this requirement shall be according to NSTS 13830, the verification shall be submitted to the PSRP per NSTS 13830. Verification shall be considered successful when hazard reports and safety data presented to the PSRP during the phased safety reviews are approved.

4.3.9.1.3 HUMIDITY

Verification that the integrated rack is designed to not cause condensation when exposed to the specified dewpoint and relative humidity except when condensation is an intended operation of the integrated rack shall be by analysis. The verification shall be considered successful when analysis shows that no internal or external surfaces in contact with the cabin air will allow condensation when humidity and dewpoint are within the ISS atmosphere envelope defined by Figure 3.9.1.3–1. Surfaces shall be considered to be in contact with the cabin air unless a volume is hermetically sealed or environmentally conditioned to control humidity.

4.3.9.2 INTEGRATED RACK USE OF CABIN ATMOSPHERE

4.3.9.2.1 ACTIVE AIR EXCHANGE

A. Verification that active air exchange with the cabin atmosphere by an integrated rack is limited to air exchange for specimen metabolic purposes and for mass conservation purposes shall be by inspection. The verification shall be considered successful when inspection of the flight drawings shows that the rack and sub-rack payloads limit air exchange with cabin for the specified purposes.

B. Verification that aisle mounted payload and payload equipment heat loads imposed on cabin air is within the specified limits for each module shall be by analysis. The verification shall be considered successful when the analysis shows that aisle mounted payload and payload equipment heat loads will not exceed the specified allowable limits for cabin air heat rejection specified for each module.

4.3.9.2.2 OXYGEN CONSUMPTION

Verification that the integrated rack consumption of atmospheric oxygen does not exceed the specified amount shall be by analysis. The verification shall be considered successful when analysis shows that the integrated rack consumption of atmospheric oxygen shall not exceed the daily allowable amount specified.

4.3.9.2.3 CHEMICAL RELEASES

Verification of this requirement shall be according to NSTS 13830, the verification shall be submitted to the PSRP per NSTS 13830. Verification shall be considered successful when hazard reports and safety data presented to the PSRP during the phased safety reviews are approved.

4.3.9.3 IONIZING RADIATION REQUIREMENTS

4.3.9.3.1 INTEGRATED RACK CONTAINED OR GENERATED IONIZING RADIATION

Verification that Payloads containing or using radioactive materials or generating ionizing radiation meet the requirements of 1700.7 ISS Addendum shall be performed and submitted to the PSRP in accordance with NSTS 13830. Verification shall be considered successful when hazard reports and safety data presented to the PSRP during the phased safety reviews are approved.

4.3.9.3.2 IONIZING RADIATION DOSE

NVR

4.3.9.3.3 SINGLE EVENT EFFECT (SEE) IONIZING RADIATION DOSE

Verification that equipment and subsystems are designed to not produce an unsafe condition or one that could cause damage to equipment external to the payload as a result of exposure to SEE ionizing radiation shall be by analysis. An analysis of equipment and subsystems shall be performed using the operational lifetime and parts characterization data to assure that the design meets the requirement when exposed to SEE ionizing radiation. The verification shall be considered successful when the analysis shows that the equipment and subsystems will not

produce an unsafe condition or one that could cause damage to equipment external to the payload when exposed to the specified environment.

4.3.9.3.4 LAB WINDOW RACK LOCATION RADIATION REQUIREMENTS

NVR

4.3.9.3.4.1 WINDOW RACK INFRARED RADIATION REQUIREMENTS

Verification that shielding is provided that reduces the infrared transmittance to less than 10.0 percent for wavelengths between 850 and 1000 nanometers shall be by test. A test shall determine whether or not the shielding reduces infrared transmittance to less than 10.0 percent of the environment specified in Table 3.9.3.4–1 for wavelengths between 850 and 1000 nanometers. Verification shall be considered successful when the test shows shielding is provided that reduces the infrared transmittance to less than 10.0 percent for wavelengths between 850 and 1000 nanometers.

4.3.9.3.4.2 WINDOW RACK ULTRAVIOLET RADIATION REQUIREMENTS

Verification that shielding is provided that reduces the Ultraviolet transmittance to less than 0.01 percent fro wavelengths between 220 and 280 nanometers and less than 0.1 percent for wavelengths between 280 and 320 nanometers shall be by test. A test shall determine whether or not the shielding reduces the Ultraviolet transmittance to less than 0.01 percent for wavelengths between 220 and 280 nanometers and less than 0.1 percent for wavelengths between 280 and 320 nanometers, with an external ultraviolet environment as specified in Table 3.9.3.4–1. Verification shall be considered successful when the test shows shielding is provided that reduces the Ultraviolet transmittance to less than 0.01 percent for wavelengths between 220 and 280 nanometers and less than 0.1 percent for wavelengths between 280 and 320 nanometers.

4.3.9.4 ADDITIONAL ENVIRONMENTAL CONDITIONS

NVR

4.3.10 FIRE PROTECTION INTERFACE VERIFICATION REQUIREMENTS

4.3.10.1 FIRE PREVENTION

Verification that integrated racks meet the fire prevention requirements specified in NSTS 1700.7 ISS Addendum shall be performed and submitted to the PSRP in accordance with NSTS 13830. Verification shall be considered successful when hazard reports and safety data presented to the PSRP during the phased safety reviews are approved.

4.3.10.2 PAYLOAD MONITORING AND DETECTION REQUIREMENTS

NVR

4.3.10.2.1 SMOKE DETECTION

4.3.10.2.1.1 SMOKE DETECTOR

A. Verification that integrated racks requiring smoke detection use a smoke detector that meets the requirements specified in 683–10007 and SSP 30262:013 shall be by inspection. Verification shall be considered successful when the inspection shows the end item spec and interface control document of the smoke detector used meets the requirements specified in 683–10007 and SSP 30262:013 respectively. Integrated racks using the ISS provided smoke detector shall be considered in compliance with this requirement.

B. Verification that integrated racks requiring a smoke detector provide a smoke detector interface at the J43 connection shall be by inspection and demonstration. The inspection shall consist of reviewing schematics/drawings to verify they show wiring to the J43 connector. The verification shall be considered successful when the inspection shows wiring from smoke detector to the J43 connector. The demonstration shall be conducted to show the connector mates with the ISS equivalent connector. The verification shall be considered successful when the demonstration shows the connector mates with the ISS equivalent connector.

4.3.10.2.1.2 FORCED AIR CIRCULATION INDICATION

Verification that integrated racks provide a signal or data indicating whether or not air flow is being provided to the smoke detector when the smoke detector is in use shall be by test. Verification shall be considered successful when the test shows signal strength meets the interface characteristics in paragraph 3.3.10 when airflow of 3–30.5 m/s (10–100 ft/sec) is provided at the smoke detector.

4.3.10.2.1.3 FIRE DETECTION INDICATOR

A. Verification that integrated racks using a smoke detector provide a red Fire Detection Indicator LED in an easily visible location on the front of the rack shall be by test and inspection. The test shall show the LED meets or exceeds the operational characteristics of the ISS provided LED when provided the interface characteristics defined in paragraph 3.3.10. Test verification shall be considered successful when the test shows the indicator LED meets or exceeds the operational characteristics of the ISS provided LED when provided the interface characteristics defined paragraph 3.3.10. Integrated racks using the ISS provided Fire Detection Indicator LED shall be considered in compliance with this requirement. The inspection shall show the LED is positioned in an obvious, easily viewed location on the aisle side of the rack. Inspection verification shall be considered successful

when the inspection shows the LED is positioned in an obvious, easily viewed location on the aisle side of the rack.

B. Verification that integrated racks requiring a fire detection indicator provide a fire detection indicator interface at the J43 connection shall be by inspection. The inspection shall consist of reviewing schematics/drawings to verify they show wiring to the J43 connector. The verification shall be considered successful when the inspection shows wiring from the fire detection indicator to the J43 connector.

4.3.10.2.2 PARAMETER MONITORING

4.3.10.2.2.1 PARAMETER MONITORING USE

Verification that integrated rack or sub-rack volumes which contain a potential fire source and do not exchange air with the rack smoke detector provide sensors that will monitor that volume to detect a fire event shall be by analysis and inspection. An analysis of the payload volume design shall be conducted to determine whether or not the volume contains a potential fire source. If there is a potential fire source present, an inspection of drawings or hardware shall be conducted to determine whether or not the volume contains the sensors to detect a fire event as approved by the PSRP during the phased safety reviews. Verification shall be considered successful when the inspection and analysis shows there are sensors, as approved by the PSRP during the phased safety reviews, to detect a fire event in a volume that contains a potential fire source and does not exchange air with the rack smoke detector.

4.3.10.2.2.2 PARAMETER MONITORING RESPONSE

4.3.10.2.2.2.1 PARAMETER MONITORING IN SUBRACK

A. Verification that the integrated rack provides manual and automatic capabilities to terminate forced air circulation (if present) and power to each sub-rack volume that is monitored with parameter monitoring shall be by test. A test shall be conducted to determine whether or not forced air circulation and electrical power can be manually and automatically terminated in the sub-rack volume when an “out of bounds” condition is indicated by the parameter monitoring sensors. Verification shall be considered successful when the test shows forced air circulation and electrical power can be terminated manually and automatically when an “out of bounds” condition is indicated by the parameter monitoring sensors.

B. Verification that the integrated rack responds to an “out of bounds” condition within a separate, sub-rack volume that is monitored with parameter monitoring by sending data to indicate the occurrence and location of the “out of bounds” condition to the payload MDM in the format specified in paragraph 3.3.5.1.4 shall be by test and analysis. For the initial configuration of the integrated rack, a test with the PRCU or equivalent shall determine whether or not the rack health and status data is formatted to indicate the occurrence and location of an “out of bounds” condition when one is indicated by parameter monitoring

sensors. For sub-rack payloads that are changed out, a test of the interface to the integrated rack's controller or equivalent and an analysis to determine the interface to the Payload MDM is correct shall be conducted. Verification shall be considered successful when the test and analysis shows data is sent in the format specified in paragraph 3.3.5.1.4 to indicate the occurrence and location of an "out of bounds" condition when one is indicated by the parameter monitoring sensors.

4.3.10.2.2.2.2 PARAMETER MONITORING IN INTEGRATED RACK

A. Verification that integrated racks only using parameter monitoring provide manual and automatic capability to terminate forced air circulation (if present) and power to the integrated rack shall be by test. A test with the PRCU or equivalent shall be conducted to determine whether or not forced air circulation and electrical power can be manually or automatically terminated in the integrated rack when an "out of bounds" condition is indicated by the parameter monitoring sensors. Verification shall be considered successful when the test shows forced air circulation and electrical power can be terminated manually or automatically when an "out of bounds" condition is indicated by the parameter monitoring sensors.

B. Verification that integrated racks only using parameter monitoring respond to an "out of bounds" condition by sending data to indicate the occurrence and location of the "out of bounds" condition to the payload MDM in the format specified in paragraph 3.3.5.1.4 shall be by test. A test with the PRCU or equivalent shall determine whether or not the rack health and status data is formatted to indicate the occurrence and location of an "out of bounds" condition when one is indicated by parameter monitoring sensors. Verification shall be considered successful when the test shows data is sent in the format specified in paragraph 3.3.5.1.4 to indicate the occurrence and location of an "out of bounds" condition when one is indicated by the parameter monitoring sensors.

4.3.10.3 FIRE SUPPRESSION

NVR

4.3.10.3.1 PORTABLE FIRE EXTINGUISHER

A. Verification that integrated racks and subracks provide a PFE access port for each rack volume containing a potential fire source shall be by inspection and analysis. An analysis of the payload volume design shall be conducted to determine whether or not the payload volume contains a potential fire source. If there is a potential fire source present, an inspection shall be conducted to determine whether or not an access port with a diameter between 12.7 mm (0.5 inch) and 25.4 mm (1.0 inch) is provided, if the panel thickness is less than or equal to 3.175 mm (0.125 inch). Verification shall be considered successful when the inspection of the drawings or hardware show an access port with a diameter

between 12.7 mm (0.5 inch) and 25.4 mm (1.0 inch) is provided for each volume containing a potential fire source if the panel thickness is less than 3.175 mm (0.125 inch).

B. Verification that integrated racks and subracks provide a PFE access port for each rack volume containing a potential fire source shall be by inspection and analysis. An analysis of the payload volume design shall be conducted to determine whether or not the payload volume contains a potential fire source. If there is a potential fire source present, an inspection shall be conducted to determine whether or not an access port with a diameter of 25.4 mm (1.0 inch) in diameter is provided, if the panel thickness is greater than 3.175 mm (0.125 inch). Verification shall be considered successful when the inspection of the drawings or hardware show an access port with a diameter of 25.4 mm (1.0 inch) is provided for each volume containing a potential fire source if the panel thickness is equal to or greater than 3.175 mm (0.125 inch).

4.3.10.3.2 FIRE SUPPRESSION ACCESS PORT ACCESSIBILITY

Verification that the design of the integrated rack permits the PFE nozzle to interface with the access port shall be by demonstration. Verification shall be considered successful when the demonstration shows the design of the integrated rack, including protrusions, allows the PFE nozzle to interface with the access port over the face of the integrated rack, without relying on areas adjacent to the integrated rack.

4.3.10.3.3 FIRE SUPPRESSANT DISTRIBUTION

Verification that the internal layout of the integrated rack will allow ISS PFE fire suppressant to be distributed to the entire volume that PFE Access Port serves, lowering the Oxygen concentration to or below 10.5% by volume at any point within the enclosure within one minute shall be by analysis or test. Referring to rack qualification tests, which show the ISS PFE will reduce the rack volume Oxygen concentration to or below 10.5% by volume within one minute, an analysis shall be performed on the integrated rack to determine whether or not the internal layout of the integrated rack prevents suppressant from flowing to any volume internal to the volume that PFE Access Port serves. When verified by test, the test shall be performed to determine whether or not the ISS PFE fire suppressant, as specified in Figure 3.1.1.4–1, is distributed to the entire volume that PFE Access Port serves, lowering the Oxygen concentration to or below 10.5% by volume at any point within the enclosure within one minute. Verification shall be considered successful when the analysis or test shows the internal layout of the integrated rack will allow ISS PFE fire suppressant to be distributed to the entire volume a PFE Access Port serves, lowering the Oxygen concentration to or below 10.5% by volume at any point within the enclosure within one minute.

4.3.10.3.4 DELETED

4.3.10.3.4.1 DELETED

4.3.10.3.4.2 DELETED

4.3.10.4 LABELING

A. Verification that the PFE access port is labeled with a SDD32100397–002 ”Fire Hole Decal” shall be by inspection. Verification shall be considered successful when the inspection shows a SDD32100397–002 ”Fire Hole Decal” has been placed over the PFE access port.

B. Verification that integrated racks requiring a Fire Detection Indicator LED label the Fire Detection Indicator LED “SMOKE INDICATION” shall be by inspection. Verification shall be considered successful when the inspection shows the label “SMOKE INDICATION” has been placed above the Fire Detection Indicator LED using lettering per MSFC–STD–275 with 3.96 mm (0.156 inch) letters, style Futura Demibold, and color 37038 (Lusterless Black) per FED–STD–595. Integrated racks using the ISS provided LED on the rack maintenance switch assembly with the engraved “SMOKE INDICATION” label shall be considered in compliance with this requirement.

4.3.11 MATERIALS AND PARTS INTERFACE VERIFICATION REQUIREMENTS

4.3.11.1 MATERIALS AND PARTS USE AND SELECTION

Verification that parts and materials meet the requirements of NSTS 1700.7 ISS Addendum shall be performed and submitted to the PSRP in accordance with NSTS 13830. Verification shall be considered successful when hazard reports and safety data presented to the PSRP during the phased safety reviews are approved.

4.3.11.1.1 COMMERCIAL PARTS

Verification that COTS parts meet the requirements of 1700.7 ISS Addendum shall be performed and submitted to the PSRP in accordance with NSTS 13830. Verification shall be considered successful when hazard reports and safety data presented to the PSRP during the phased safety reviews are approved.

4.3.11.2 FLUIDS

A. Verification of fluid physical and chemical characteristics shall be by test. A test shall be conducted according to the verification test requirements specified in SSP 30573, section 4.0 to determine whether or not the fluid contained in the integrated rack interfacing

with the ISS satisfies the fluid physical and chemical characteristics. The verification shall be considered successful if the test results show the integrated rack fluid physical and chemical characteristics meets the fluid chemistry requirements in SSP 30573.

B. Verification of fluid system cleanliness levels shall be by test. The verification shall be considered successful when sampling test per SSP 30573, section 4.0 show that fluids in the integrated rack comply with the cleanliness level requirements specified.

C. Verification of fluid system dissimilar metals compatibility shall be by inspection or analysis. The inspection shall compare the materials and parts list with the materials listed in MSFC–SPEC–250, Table III. Verification success shall be when the inspection of the materials and parts list show the internal materials used in the integrated rack aqueous fluid systems are compatible according to the table specified. Analysis shall be performed on materials not listed in MSFC–SPEC–250, Table III. Verification success shall be when the analysis of the materials show the internal materials used in the integrated rack aqueous fluid systems do not create a dissimilar metal couple greater than 0.25 Volts with the ISS aqueous fluid system.

4.3.11.3 CLEANLINESS

Verification that integrated racks conform to Visibly Clean-Sensitive (VC–S) cleanliness requirements as specified in SN–C–0005 shall be by inspection. An inspection of the cleanliness documentation required by precision cleaning shall be performed to show that each part, component, subsystem and system of the end product meets the VC–S requirement. Verification shall be considered successful when the inspection shows that each part, component, subsystem and system of the end product meets the VC–S requirement.

4.3.11.4 FUNGUS RESISTANT MATERIAL

Verification that integrated racks that are intended to remain on-orbit for more than one (1) year use fungus resistant materials according to the requirements in SSP 30233, paragraph 4.2.10 shall be by inspection. Inspection of design drawings and materials lists shall determine whether fungus resistant materials have been used as required. Verification shall be considered successful when the inspection shows fungus resistant materials are used as required.

4.3.12 HUMAN FACTORS INTERFACE REQUIREMENTS

4.3.12.1 STRENGTH REQUIREMENTS

A. Normal Operations:

(1) Grip strength shall be verified by analysis or demonstration. The verification shall be considered successful when the analysis or demonstration shows that the grip strength required to remove, replace and operate the integrated rack equipment is as specified.

(2) Linear forces shall be verified by analysis or demonstration. The verification shall be considered successful when the analysis or demonstration shows that the linear forces required to remove, replace and operate the integrated rack equipment is as specified.

(3) Torsional forces shall be verified by analysis or demonstration. The verification shall be considered successful when the analysis or demonstration shows that the torsional forces required to remove, replace and operate the integrated rack equipment is as specified.

B. Maintenance Operations:

Forces shall be verified by analysis or demonstration. The verification shall be considered successful when the analysis or demonstration shows that the strength values required to perform maintenance operations on the integrated rack equipment is as specified.

4.3.12.2 BODY ENVELOPE AND REACH ACCESSIBILITY

4.3.12.2.1 ADEQUATE CLEARANCE

The integrated rack clearance shall be verified by analysis or demonstration. The analysis shall be based on an evaluation of the drawing(s) with the clearance requirements to perform the tasks using the tools and equipment utilized in payload installation, operations, and maintenance. The demonstration shall be performed on the flight hardware or hardware which replicates the flight hardware configuration with the tools and equipment utilized in payload installation, operations, and maintenance. The verification shall be considered successful when the analysis or demonstration shows that the clearance accommodates crew performance of tasks, including tool utilization, and is sufficient to install/de-install, replace, operate and maintain the integrated rack equipment.

4.3.12.2.2 ACCESSIBILITY

A. Payload hardware accessibility shall be verified by analysis or demonstration. The verification shall be considered successful when the analysis or demonstration shows that the specified accessibility is sufficient to remove, replace, operate and maintain the integrated rack equipment.

B. IVA clearances shall be verified by analysis or demonstration. The verification shall be considered successful when the analysis or demonstration shows the specified IVA clearances.

4.3.12.2.3 FULL SIZE RANGE ACCOMMODATION

Analyses of end item drawings that contain on-orbit crew interfaces shall be performed to verify that Payload hardware accommodates the 5th percentile Japanese female to the 95th percentile American male size measurements, estimated for the year 2000, as specified in SSP 50005, Anthropometric and Biomechanics Related Design data. Drawings of workstations and hardware having crew nominal operations and planned maintenance shall be analyzed to verify that they are sized to meet the functional reach limits for the 5th percentile Japanese female. Drawings of workstations and hardware having crew nominal operations and planned maintenance shall be analyzed to verify that they are sized to not confine the body envelope of the 95th percentile American male.

4.3.12.3 HABITABILITY

4.3.12.3.1 HOUSEKEEPING

4.3.12.3.1.1 CLOSURES OR COVERS

Design of closures or covers shall be verified by inspection of the integrated rack drawings. Verification shall be considered successful when inspection of the flight hardware confirms compliance with the requirement.

4.3.12.3.1.2 BUILT-IN CONTROL

A. Design of built-in controls shall be verified by inspection of the integrated rack drawings. Verification shall be considered successful when inspection of the flight hardware confirms compliance with the requirement.

B. Crew access to capture elements shall be verified by analysis or demonstration. The verification shall be considered successful when the analysis or demonstration shows that the crew can access the flight hardware capture elements for cleaning or replacement without dispersion of trapped material.

C. Deleted.

4.3.12.3.1.3 DELETED

4.3.12.3.1.4 DELETED

4.3.12.3.1.5 ONE-HANDED OPERATION

Verify by demonstration that cleaning equipment and supplies can be operated using only hand.

4.3.12.3.1.6 DELETED

4.3.12.3.2 TOUCH TEMPERATURE

Verification of this requirement shall be performed and submitted to the PSRP in accordance with NSTS 13830 Verification shall be considered successful when hazard reports and safety data presented to the PSRP during the phased safety reviews are approved.

4.3.12.3.2.1 CONTINUOUS/INCIDENTAL CONTACT – HIGH TEMPERATURE

Reference paragraph 4.3.12.3.2

4.3.12.3.2.2 CONTINUOUS/INCIDENTAL CONTACT – LOW TEMPERATURE

Reference paragraph 4.3.12.3.2

4.3.12.3.3 ACOUSTIC REQUIREMENTS

NVR

4.3.12.3.3.1 CONTINUOUS NOISE LIMITS

A. **Integrated Racks Whose Sub-Rack Equipment Will Not Be Changed Out** – Verification of Continuous Noise Sources (See Glossary of Terms) for integrated racks whose sub-rack equipment will not be changed out shall be performed by test.

   Sound Pressure Level (SPL) test measurements shall be made for all sides of the integrated rack using the actual flight equipment (each serialized unit) even though prototype or qualification units may have been tested previously. The test configuration shall include any adjunct equipment, such as integrated rack-provided external computers, fans, etc., added in support of the rack system. The SPL test shall use Type 1 Sound Level Meter (SLM) (ANSI S1.4 and ANSI S1.11) to measure the SPL on the integrated rack at the loudest location 0.6 meters from the rack surface in each of eight octave bands: 63 Hz, 125 Hz, 250 Hz, 500 Hz, 1000 Hz, 2000 Hz, 4000 Hz and 8000 Hz.

   The verification shall be considered successful when the test shows the loudest noise location exposed directly to the habitable volume on the integrated rack SPL is at or below the levels specified in Table 3.12.3.3.1–1.

B. **Integrated Racks Whose Sub-Rack Equipment Will Be Changed Out** – Verification of Continuous Noise Sources (See Glossary of Terms) for integrated racks whose sub-rack equipment will be changed out, shall be verified using a test-correlated analytical model, or

some other method approved and documented in the Acoustics Noise Control Plan section of the unique Payload Verification Plan (PVP). The analytical model shall include system noise sources and anticipated sub-rack payload complement noise sources. The test-correlated model process is shown in Figure 4.3.12.3.3.1–1.

The verification shall be considered successful when the results from the test-correlated analytical model predicts the loudest location 0.6 meters from the rack surface exposed to the crew habitable volume, in each of the eight octave bands defined in Table 3.12.3.3.1–1, to be at or below the levels specified in Table 3.12.3.3.1–1 for additions, deletions or configuration changes to any sub-rack equipment within the integrated rack.

C. **Independently Operated Equipment** – Verification of Continuous Noise Sources (See Glossary of Terms) for independently operated equipment shall be performed by test.

Sound Pressure Level (SPL) test measurements shall be obtained at 0.6 meters from all sides of the equipment. The SPL test shall use a Type 1 Sound Level Meter (SLM) (ANSI S1.4 and ANSI S1.11) to measure the SPL in each of eight octave bands: 63 Hz, 125 Hz, 250 Hz, 500 Hz, 1000 Hz, 2000 Hz, 4000 Hz and 8000 Hz.

The verification shall be considered successful when the test shows the equipment SPL noise level is at or below the levels specified in Table 3.12.3.3.1–1.

4.3.12.3.3.2 INTERMITTENT NOISE LIMITS

Verification of Intermittent Noise Sources (See Glossary of Terms) for integrated racks whose sub-rack equipment will not be changed out shall be performed by test.

Sound Pressure Level (SPL) test measurements shall be obtained for the integrated rack. The test configuration shall include any adjunct equipment, such as integrated rack-provided external computers, fans, etc., added in support of the rack system. The SPL test shall use a Type 1 Sound Level Meter (SLM) (ANSI S1.4 and ANSI S1.11) to measure the Total Rack A-weighted SPL noise level and quantify the intermittent noise characteristics in terms of:

(1) when the intermittent sound occurs (a description of what payload activities/operations produce intermittent sound), i.e. a compressor turning on

(2) duration and SPL (maximum A-weighted SPL measured at 0.6 meter distance from the loudest part of the equipment)

(3) a projected mission timeline(s) (a typical payload scenario that would produce intermittent sound)

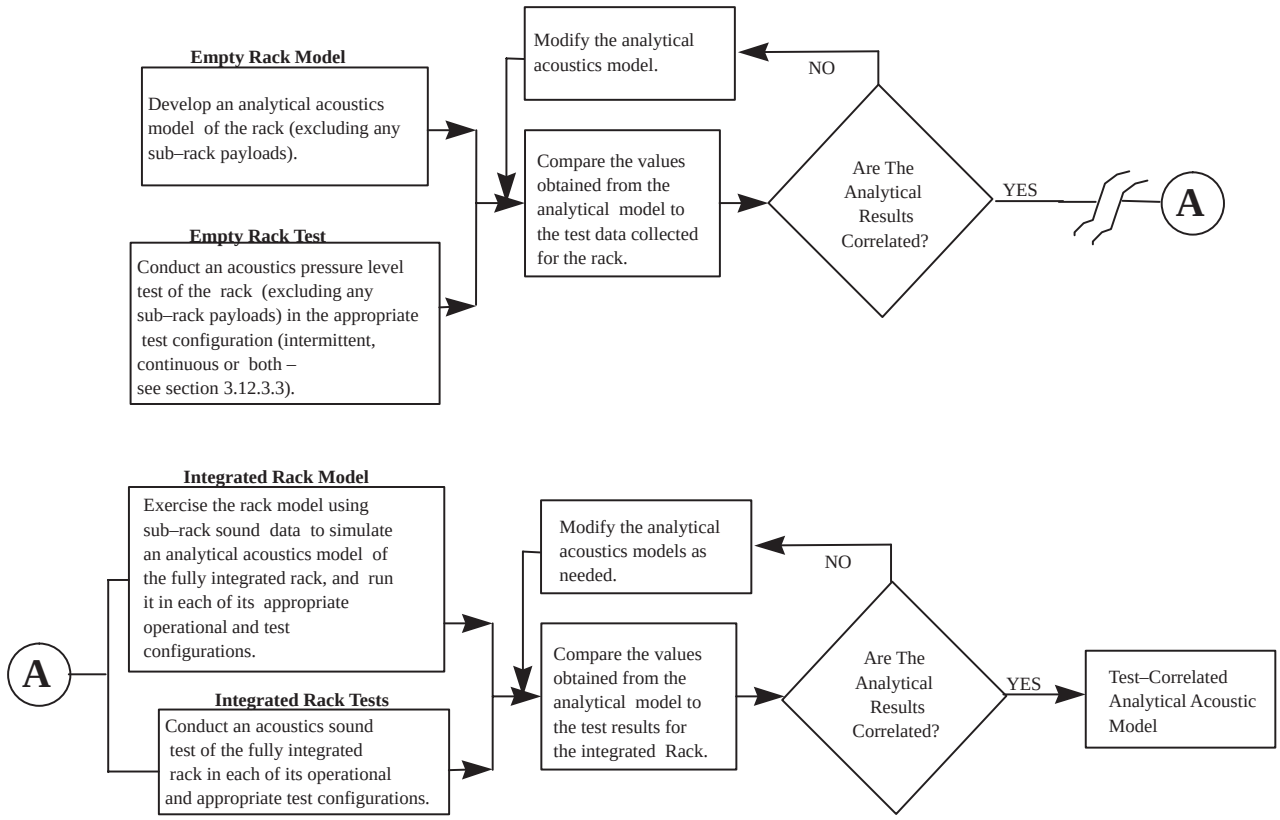

FIGURE 4.3.12.3.3.1–1 TEST-CORRELATED MODEL PROCESS

The verification shall be considered successful when the test shows the integrated rack A-weighted SPL (dBA) is at or below the levels specified in Table 3.12.3.3.2–1.

Verification of Intermittent Noise Sources (See Glossary of Terms) for integrated racks whose sub-rack equipment will be changed out shall be performed using a test-correlated analytical model, or some other method approved and documented in the Acoustics Noise Control Plan section of the unique Payload Verification Plan (PVP)

A test-correlated model as depicted in Figure 4.3.12.3.3.1–1, or other approved verification method for the integrated rack for Maximum Rack Noise Duration as defined in Table 3.12.3.3.2–1, shall be used to perform integrated rack analysis. The analysis shall exercise the test-correlated model for every intermittent noise occurrence and quantify the noise characteristics in terms of:

(1) when the intermittent sound occurs (a description of what payload activities/operations produce intermittent sound), i.e. a compressor turning on

(2) duration and SPL (maximum A-weighted SPL measured at 0.6 meter distance from the loudest part of the equipment)

(3) a projected mission timeline(s) (a typical payload scenario that would produce intermittent sound)

The verification shall be considered successful when the results from the test-correlated analytical model predicts the A-weighted noise level of the integrated rack for the Maximum Rack Noise Duration to be at or below the levels specified in Table 3.12.3.3.2–1.

4.3.12.3.4 LIGHTING DESIGN

A. Verification of the specularity of the total work surface reflection shall be by testing or inspection. The testing shall be considered successful when the specularity of the total work surface reflection does not exceed 20 percent. The inspection shall be considered successful if the work space surface uses paint(s) selected from Table 3.12.3.4–1.

B. The task illumination level identified in Table 3.12.3.4–2 shall be verified by test. The test shall be considered successful when illumination level as identified in Table 3.12.3.4–2 measured at the task site(s) is met. The illumination level in a glovebox payload shall be determined by taking the average of a minimum of nine measurements (3–by–3 matrix) equally spaced encompassing the base of the work area surface.

C. Verification of a dimmable light source shall be by demonstration. The demonstration shall be considered successful when the light source is demonstrated to be continuously adjustable between 0 (off) and 100 percent (on) output.

D. Verification of the brightness ratio in a glovebox shall be by demonstration. The demonstration shall be considered successful when the minimum to maximum illumination levels, taken from the nine measurements in item B, does not exceed a brightness ratio of 3:1.

E. The use of the PUL for medium payload operational tasks shall be verified by analysis or test. The analysis or test shall show the PUL placed in a configuration that provides the required level of illumination at the task site. The analysis or test shall be considered successful when it shows that the payload is designed to use the PUL for all medium payload operational tasks.

4.3.12.4 STRUCTURAL/MECHANICAL INTERFACES

4.3.12.4.1 DELETED

4.3.12.4.1.1 DELETED

4.3.12.4.2 PAYLOAD HARDWARE MOUNTING

4.3.12.4.2.1 EQUIPMENT MOUNTING

Equipment mounting used during nominal operations and planned maintenance shall be verified by analysis or demonstration. The verification shall be considered successful when the analysis or demonstration shows that the payload hardware used during nominal operations and planned maintenance is designed, labeled, or marked to protect against improper installation.

4.3.12.4.2.2 DRAWERS AND HINGED PANELS

Drawers and hinged panels shall be verified by analyses. Verification shall be considered successful when an analysis of the equipment flight drawings shows that any payload ORU that has to be removed is mounted on equipment drawers or hinged panels, and remains in the open position without being supported by the hand.

4.3.12.4.2.3 DELETED

4.3.12.4.2.4 DELETED

4.3.12.4.2.5 ALIGNMENT

Alignment shall be verified by analysis. Verification shall be considered successful when an analysis of the payload flight hardware drawings shows that guide pins or their equivalent are provided to assist in alignment during installation of hardware with blind mate connectors.

4.3.12.4.2.5.1 DELETED

4.3.12.4.2.6 SLIDE-OUT STOPS

Slide-out stops shall be verified by inspection, analysis or demonstration. Verification shall be considered successful when an inspection or analysis of the drawings or demonstration of the payload flight hardware shows that limit stops are provided on slide or pivot mounted sub-rack hardware which is required to be pulled out of its installed positions.

4.3.12.4.2.7 PUSH-PULL FORCES

Push-Pull forces shall be verified by analysis. Verification shall be considered successful when an analysis of the payload flight hardware shows that hardware mounted into a capture-type receptacle that requires push-pull action requires a force less than 156 N to install and remove.

4.3.12.4.2.8 ACCESS

Access to inspect or replace a hardware item which is planned to be accessed on a daily or weekly basis shall be verified by analysis or demonstration. Verification shall be considered successful when an analysis of the payload flight hardware drawings or a demonstration of the payload flight hardware shows that hardware items which are planned to be accessed on a daily or weekly basis can be inspected and replaced without requiring the removal of an ORU or more than one access cover.

4.3.12.4.2.8.1 COVERS

The following verification requirements apply to paragraph 3.12.4.2.8.1A and B.

An analysis of payload hardware and flight drawings shall be performed to verify requirement. The verification shall be considered successful when the analysis shows the requirement has been met.

4.3.12.4.2.8.2 SELF-SUPPORTING COVERS

Self-supporting covers shall be verified by analysis. Verification shall be considered successful when an analysis of the payload flight hardware drawings shows that all access covers that are not completely removable are self-supporting in the open position.

4.3.12.4.2.8.3 DELETED

4.3.12.4.2.8.4 UNIQUE TOOLS

Unique tools shall be verified by analysis. Verification shall be considered successful when an analysis of the payload flight hardware drawings meet the requirements of 50005, paragraph 11.2.3.

4.3.12.4.3 CONNECTORS

4.3.12.4.3.1 ONE-HANDED OPERATION

One-handed operation shall be verified by analysis or demonstration. The analysis or demonstration shall be performed on the drawings or flight hardware which replicates the flight configuration. Verification shall be considered successful when the analysis or demonstration shows the all connectors can be mated/demated using only one hand, which does not preclude the use of either hand.

4.3.12.4.3.2 ACCESSIBILITY

A.

(1) Nominal Operations – Accessibility shall be verified by analysis or demonstration. Verification shall be considered successful when an analysis of the payload flight hardware drawings or demonstration of the payload flight hardware shows that it is possible to mate/demate individual connectors without having to remove or mate/demate other connectors.

(2) Maintenance Operations – Accessibility shall be verified by analysis or demonstration. Verification shall be considered successful when an analysis of the payload flight hardware drawings or demonstration of the payload flight hardware shows that it is possible to mate/demate individual connectors without having to remove or mate/demate connectors on other ORUs or payloads.

B. Accessibility shall be verified by analysis. Verification shall be considered successful when an analysis of the payload hardware drawings shows that it is possible to disconnect and reconnect electrical connectors and cable installations without damage to wiring connectors.

4.3.12.4.3.3 EASE OF DISCONNECT

A. Ease of disconnect shall be verified by analysis. Verification shall be considered successful when the analysis shows that electrical connectors which are mated/demated during nominal operations, require no more than two turns to disconnect.

B. Ease of disconnect shall be verified by analysis. Verification shall be considered successful when the analysis shows that electrical connectors which are mated/demated during ORU replacement operations require no more than six turns to disconnect.

4.3.12.4.3.4 INDICATION OF PRESSURE/FLOW

Indication of pressure flow shall be verified by analysis. Verification shall be considered successful when analysis of payload flight hardware drawings shows that payload liquid or gas lines not equipped with quick disconnect connectors which are designed to be connected/disconnected under pressure are fitted with pressure/flow indicators.

4.3.12.4.3.5 SELF LOCKING

Self locking shall be verified by analysis. Verification shall be considered successful when an analysis of payload flight hardware drawings shows payload electrical connectors are provided with a self-locking feature.

4.3.12.4.3.6 CONNECTOR ARRANGEMENT

A. Connector arrangement shall be verified by inspection. Verification shall be considered successful when an inspection of the space between connectors and adjacent obstructions comply with the requirement.

B. Connector arrangement shall be verified by inspection. Verification shall be considered successful when an inspection of connectors in a single row or staggered rows comply with the requirements.

4.3.12.4.3.7 ARC CONTAINMENT

Arc Containment shall be verified by analysis. Verification shall be considered successful when an analysis of the payload flight hardware drawings shows that electrical connector plugs confine/isolate the mate/demate electrical arcs or sparks.

4.3.12.4.3.8 CONNECTOR PROTECTION

Connector protection shall be verified by analysis. Verification shall be considered successful when an analysis shows that protection is provided for all demated connectors against physical damage and contamination.

4.3.12.4.3.9 CONNECTOR SHAPE

Connector shape shall be verified by analysis. Verification shall be considered successful when an analysis of payload flight hardware drawings shows that connectors which differ in content are of different shape or are physically incompatible.

4.3.12.4.3.10 FLUID AND GAS LINE CONNECTORS

The inspection of fluid and gas line connectors that are mated and demated on-orbit shall be verified by analysis. Verification shall be considered successful when an analysis of payload flight hardware drawings shows that fluid and gas connectors that are mated and demated on-orbit are located and configured so that they can be fully inspected for leakage.

4.3.12.4.3.11 ALIGNMENT MARKS OR GUIDE PINS

A. Alignment marks or guide pins on mating parts shall be verified by inspection. Verification shall be considered successful when an inspection shows that mating parts have alignment marks in a visible location during mating or guide pins (or their equivalent).

B. Deleted.

4.3.12.4.3.12 CODING

A. Coding shall be verified by inspection. Verification shall be considered successful when an inspection shows that both halves of mating connectors display a code or identifier which is unique to that connection.

B. Coding shall be verified by inspection. Verification shall be considered successful when an inspection shows that labels or codes on connectors are visible when connected or disconnected.

4.3.12.4.3.13 PIN IDENTIFICATION

Pin identification shall be verified by inspection. Verification shall be considered successful when an inspection shows that each pin is uniquely identified.

4.3.12.4.3.14 ORIENTATION

Orientation shall be verified by analysis. Verification shall be considered successful when an analysis of the payload flight hardware drawings shows that grouped plugs and receptacles are oriented so that the aligning pins or equivalent devices are in the same relative position.

4.3.12.4.3.15 HOSE/CABLE RESTRAINTS

A. Hose/Cable restraints shall be verified by inspection. Verification shall be considered successful when an inspection shows that the loose ends of hoses and cables have a means of being restrained.

B. Hose/Cable restraints shall be verified by inspection. Verification shall be considered successful when an inspection shows that conductors, bundles, or cables are secured by a means of clamps unless they are contained in wiring ducts or cable retractors.

C. NVR

D. Hose/Cable restraints shall be verified by inspection. Verification shall be considered successful when an inspection shows that loose cables are restrained as specified.

4.3.12.4.4 FASTENERS

4.3.12.4.4.1 NON-THREADED FASTENERS STATUS INDICATION

Non-threaded Fasteners Status indication shall be verified by demonstration or inspection. Verification shall be considered successful when demonstration or inspection shows that an indication of correct engagement (hooking, latch fastening, or proper positioning of interfacing parts) of non-threaded fasteners shall be provided.

4.3.12.4.4.2 MOUNTING BOLT/FASTENER SPACING

Mounting bolt/fastener spacing shall be verified by inspection. Verification shall be considered successful when an inspection shows that mounting bolts and fasteners are spaced as specified.

4.3.12.4.4.3 DELETED

4.3.12.4.4.4 MULTIPLE FASTENERS

A. Multiple fasteners shall be verified by inspection. Verification shall be considered successful when an inspection shows that when several fasteners are used on one item they are all of identical type.

B. Deleted.

4.3.12.4.4.5 CAPTIVE FASTENERS

Captive fasteners shall be verified by analysis. Verification shall be considered successful when an analysis shows that fasteners planned to be installed and/or removed on-orbit are captive when disengaged.

4.3.12.4.4.6 QUICK RELEASE FASTENERS

A. Quick release fasteners shall be verified by inspection. Verification shall be considered successful when an inspection shows that fasteners require a maximum of one complete turn to operate.

B. Quick release fasteners shall be verified by inspection. Verification shall be considered successful when an inspection shows that fasteners are positive locking in open and closed positions.

4.3.12.4.4.7 THREADED FASTENERS

Threaded fasteners shall be verified by inspection. The inspection shall be of the drawings. Verification shall be considered successful when the inspection shows that all threaded fasteners are right handed.

4.3.12.4.4.8 OVER CENTER LATCHES

A. Over center latches shall be verified by inspection. Verification shall be considered successful when an inspection shows that there is a provision to prevent undesired latch element realignment, interface, or reengagement.

B. Over center latches shall be verified by inspection. Verification shall be considered successful when an inspection shows that latch catches have a locking features.

C. Over center latches shall be verified by inspection. Verification shall be considered successful when an inspection shows that the latch handle and latch release are operable by one hand.

4.3.12.4.4.9 WINGHEAD FASTENERS

Winghead fasteners shall be verified by inspection. Verification shall be considered successful when an inspection shows that fold and are retained flush with surfaces.

4.3.12.4.4.10 DELETED

4.3.12.4.4.11 FASTENER HEAD TYPE

A. The hex type external or internal grip or combination head fastener type shall be verified by inspection. The inspection shall be of the hardware or the drawings and parts list. Verification shall be considered successful when an inspection shows that the hex type external or internal grip or combination head fasteners are used for all on-orbit crew actuated equipment.

B. The use flush or oval head internal hex grip fastener head type on smooth surfaces shall be verified by inspection. The inspection shall be of the hardware or the drawings and parts list. Verification shall be considered successful when an inspection shows that, when a smooth surface is required, only flush or oval head internal hex grip fastener head types are used.

C. The verification that straight-slot fasteners are not used to carry launch loads for hard-mounted equipment shall be by inspection. The inspection shall be of the hardware or the drawings and parts list. Verification shall be considered successful when an inspection shows that straight-slot fasteners are not being used to carry launch loads for hard-mounted equipment.

4.3.12.4.4.12 ONE-HANDED ACTUATION

One handed operation shall be verified by analysis or demonstration. The analysis or demonstration shall be performed on the drawings or flight hardware or hardware which replicates the flight hardware configuration. Verification shall be considered successful when the demonstration shows that fasteners planned to be removed or installed on-orbit can be mated/demated using only one hand, which does not preclude the use of either hand.

4.3.12.4.4.13 DELETED

4.3.12.4.4.14 ACCESS HOLES

Access holes shall be verified by inspection. Verification shall be considered successful when an inspection shows that covers or shields through which mounting fasteners must pass for attachment to the basic chassis of the unit shall have holes for passage of the fastener without precise alignment .

4.3.12.5 CONTROLS AND DISPLAYS

4.3.12.5.1 CONTROLS SPACING DESIGN REQUIREMENTS

Controls spacing design shall be verified by inspection. Verification shall be considered successful when the spacing between controls and adjacent obstructions is as specified.

4.3.12.5.2 ACCIDENTAL ACTUATION

4.3.12.5.2.1 PROTECTIVE METHODS

Protective methods to reduce accidental actuation of controls shall be verified by inspection. Verification shall be considered successful when one or more of the conditions called out in sub–paragraphs A through G of paragraph 3.12.5.2.1 are met.

4.3.12.5.2.2 NONINTERFERENCE

Noninterference shall be verified by inspection. Verification shall be considered successful when an inspection shows that protection devices do not cover or obscure other displays and controls.

4.3.12.5.2.3 DEAD-MAN CONTROLS

NVR

4.3.12.5.2.4 BARRIER GUARDS

Barrier guards shall be verified by inspection. Verification shall be considered successful when an inspection shows that the barrier guard spacing is as specified.

4.3.12.5.2.5 RECESSED SWITCH PROTECTION

Recessed switch protection shall be verified by inspection. Verification shall be considered successful when an inspection shows that rotary switches that control critical functions, and do not have a barrier guard, are recessed as specified.

4.3.12.5.2.6 DELETED

4.3.12.5.2.7 POSITION INDICATION

Position indication shall be verified by inspection. Verification shall be considered successful when an inspection shows that control position is evident without requiring cover removal.

4.3.12.5.2.8 HIDDEN CONTROLS

Hidden controls shall be verified by inspection. Verification shall be considered successful when an inspection shows that hidden controls are guarded to protect against inadvertent actuation.

4.3.12.5.2.9 HAND CONTROLLERS

Hand controllers shall be verified by inspection. Verification shall be considered successful when an inspection shows that hand controllers have a separate on/off control.

4.3.12.5.3 VALVE CONTROLS

A. Low-torque valve controls shall be verified by inspection. Verification shall be considered successful when an inspection of the payload flight hardware drawings of valves classified as low-torque are equipped with a central pivot type handle as specified.

B. Intermediate-torque valve controls shall be verified by inspection. Verification shall be considered successful when an inspection of the payload flight hardware drawings of valves classified as intermediate-torque are equipped with a central pivot or lever type handle as specified.

C. High-torque valve controls shall be verified by inspection. Verification shall be considered successful when an inspection of the payload flight hardware drawings of valves classified as high-torque valves are equipped with a lever type handle as specified.

D. Handle dimensions shall be verified by inspection. Verification shall be considered successful when an inspection of payload flight hardware drawings is as specified.

E. Rotary valve controls shall be verified by inspection. Verification shall be considered successful when an inspection shows that rotary valve controls open the valve with a counter-clockwise motion.

4.3.12.5.4 TOGGLE SWITCHES

Toggle switches shall be verified by inspection. Verification shall be considered successful when an inspection of the flight article drawings is as specified.

4.3.12.6 RESTRAINTS AND MOBILITY AIDS

The design of the integrated rack shall be verified by demonstration or analysis. Verification shall be considered successful when the payload rack installation, operation, and maintenance tasks can be performed using standard crew restraints, mobility aids, and interfaces as specified. The demonstration or analysis shall show adequate clearance for attaching RMAs in a position that 95% and 5% crew can reach and is oriented to perform the installation, operation, and maintenance tasks.

4.3.12.6.1 STOWAGE DRAWER CONTENTS RESTRAINTS

A. The payload drawer/tray contents restraints shall be verified by inspection and analysis. The inspection and analysis shall be of the drawings of the flight hardware or hardware which replicates the flight hardware configuration. Verification shall be considered successful when the inspection and analysis shows that all items in a drawer/tray are restrained in a manner to prevent floating when the drawer is opened or closed.

B. The payload drawer/tray contents will be verified by demonstration. The demonstration shall be performed on the flight hardware or hardware which replicates the flight hardware configuration. Verification shall be considered successful when a demonstration shows that the restrained payload drawer/tray contents (including the restraints mentioned in 4.3.12.6.1, A) do not jam the drawer when the drawer is opened or closed.

C. The restraints for the payload drawer/tray contents shall be verified by demonstration. The demonstration shall be performed on the flight hardware or hardware which replicates the flight hardware configuration. The verification shall be considered successful when the demonstration shows that the contents of the payload drawer/tray can be removed and/or replaced without using a tool.

4.3.12.6.2 STOWAGE AND EQUIPMENT DRAWERS/TRAYS

A. Verification of stowage equipment drawers/trays shall be done by inspection. Verification shall be considered successful when an inspection of the payload flight hardware drawings shows that all latches, handles, and operating mechanisms are designed to be latched/unlatched and opened/closed with one hand by the 95th percentile American male and accommodate the 5th percentile female.

B. Verification of stowage and equipment drawers/trays shall be done by inspection. Verification shall be considered successful when an inspection shows that latches shall be such that their status can be determined through visual inspection.

4.3.12.6.3 CAPTIVE PARTS

Captive parts shall be verified by inspection. Verification shall be considered successful when an inspection shows that all unrestrained parts that are temporarily removed on orbit are held captive.

4.3.12.6.4 HANDLE AND GRASP AREA DESIGN REQUIREMENTS

4.3.12.6.4.1 HANDLES AND RESTRAINTS

Verification of portable equipment grasp capability shall be by demonstration or inspection. The demonstration shall utilize personnel with hand dimensions within 10% of Table 3.12.6.4.2–1 to demonstrate sufficient grasp capability is provided for the 5th percentile female and 95th percentile male. The inspection shall utilize drawings to verify that a handle or other suitable grasp area is provided for portable equipment. The demonstration or inspection shall be considered successful when it is shown that the portable equipment can be grasped by both 5th percentile and 95th percentile personnel using one hand.

4.3.12.6.4.2 DELETED

4.3.12.6.4.3 HANDLE LOCATION/FRONT ACCESS

Handle location and access requirements shall be verified by inspection of the integrated rack drawings. Verification shall be considered successful when inspection of the flight hardware confirms compliance with the requirement.

4.3.12.6.4.4 HANDLE DIMENSIONS

IVA handle dimensions for moveable or portable units shall be verified by analysis or demonstration. The verification shall be considered successful when demonstration of the flight hardware confirms compliance with the requirements.

4.3.12.6.4.5 NON-FIXED HANDLES DESIGN REQUIREMENTS

A. Nonfixed handle stop position shall be verified by analysis and demonstration. The verification shall be considered successful when demonstration of the flight hardware confirms compliance with the requirement.

B. Verification of one-handed operation shall be done by demonstration. The verification shall be considered successful when demonstration of this requirement is met.

C. The incorporation of tactile and/or visual indication of locked/unlocked status shall be verified by inspection and demonstration. The verification shall be considered successful when demonstration of the flight hardware confirms compliance with the requirement.

4.3.12.7 IDENTIFICATION LABELING

Labels on integrated racks, all (installed in the rack or separately) sub–rack elements, loose eqiuipment, consumables, ORUs, crew accessible connectors and cables, switches, indicators, and controls shall be verififed by inspection. The inspection shall be of the FCSD approval documentation. The verification shall be considered successful when integrated racks, all (installed in the rack or separately) sub–rack elements, loose equipment, consumables, ORUs, crew accessible connectors and cables, switches, indicators, and controls have been shown to have FCSD approved labels. The instructions for FCSD to follow in granting approval of labels are located in Appendix C.

4.3.12.7.1 DELETED

4.3.12.7.2 DELETED

4.3.12.7.3 DELETED

4.3.12.7.4 DELETED

4.3.12.7.5 DELETED

4.3.12.7.5.1 DELETED

4.3.12.7.5.2 DELETED

A. Deleted

B. Deleted

4.3.12.7.5.3 DELETED

A. Deleted

B. Deleted

(1) Deleted

(2) Deleted

C. Deleted

D. Deleted

(1) Deleted

(2) Deleted

E. Deleted

4.3.12.7.5.4 DELETED

A. Deleted

B. Deleted

C. Deleted

D. Deleted

E. Deleted

4.3.12.7.5.5 DELETED

4.3.12.7.5.6 DELETED

A. Deleted

B. Deleted

C. Deleted

(1) Deleted

(2) Deleted

D. Deleted

(1) Deleted

(2) Deleted

(a) Deleted

(b) Deleted

E. Deleted

4.3.12.7.5.7 DELETED

4.3.12.7.5.7.1 DELETED

A. Deleted

B. Deleted

C. Deleted

4.3.12.7.5.8 DELETED

4.3.12.7.5.9 DELETED

4.3.12.7.5.10 DELETED

A. Deleted

B. Deleted

C. Deleted

D. Deleted

4.3.12.7.5.11 DELETED

A. Deleted

B. Deleted

C. Deleted

D. Deleted

E. Deleted

F. Deleted

4.3.12.7.5.12 DELETED

4.3.12.7.5.13 DELETED

4.3.12.7.6 DELETED

A. Deleted

B. Deleted

C. Deleted

4.3.12.8 COLOR

Interior colors and finishes documentation shall be inspected to verify that it follows the color coding scheme as specified in Table 3.12.3.4–1.

Color shall be verified by inspection. Verification shall be considered successful when an inspection shows that interior colors are as specified.

4.3.12.9 CREW SAFETY

Verification of this requirement shall be performed and submitted to the PSRP in accordance with NSTS 13830. Verification shall be considered successful when hazard reports and safety data presented to the PSRP during the phased safety reviews are approved.

4.3.12.9.1 ELECTRICAL HAZARDS

For equipment other than bioinstrumentation equipment, verification of hazard controls shall be by analysis and/or test. The analysis and/or test shall: (1) define the maximum voltage and current profiles to which a crew member might be exposed by the worst case combination of credible failures, events, and/or environments the equipment might experience, and (2) show that the crew is protected by the controls incorporated in the equipment. Verification shall be considered successful when it shows that the appropriate requirements from the following list are satisfied:

A. NVR

B. The exposure condition exceeds the threshold for shock, but is below the threshold of the let–go current profile (critical hazard) as defined in Table 3.2.5.4.–1, and two independent controls (e.g., a safety (green) wire, bonding, insulation, leakage current levels below maximum requirements) are provided, and the design of the controls is such that no single failure, event, or environment can eliminate more than one control.

C. The exposure condition exceeds both the threshold for shock and the threshold of the let–go current profile (catastrophic hazardous events) as defined in Table 3.2.5.4.–1, and three independent controls are provided, and the design of the controls is such that no combination of two failures, events or environments can eliminate more than two controls.

D. If two dependent controls are provided, the physiological effect that a crew member experiences as a result of the combinations of the highest internal voltage applied to or generated within the equipment and the frequency and wave form associated with a worst case credible failure is below the threshold of the let–go current profile as defined in Table 3.2.5.4.–1.

E. If the analysis fails to clearly define the exposure condition that a crew member might experience, three independent hazard controls are provided and the design of the controls is such that no combination of two failures, events or environments can eliminate more than two controls.

4.3.12.9.1.1 MISMATCHED

The design of electrical connectors to preclude inadvertent reversal of connections shall be verified by analysis, inspection and demonstration. The verification shall be considered successful only when all of the integrated rack electrical connectors, and wire harnesses requiring crew access to mate/demate during on-orbit operations are demonstrated to meet the requirements.

4.3.12.9.1.2 DELETED

4.3.12.9.1.3 OVERLOAD PROTECTION

NVR

4.3.12.9.1.3.1 DEVICE ACCESSIBILITY

Verification that an overload protective device will not be accessible without opening a door or cover (except operating handles or buttons of a circuit breaker, the cap of an extractor-type fuse holder, and similar parts may project outside the enclosure) shall be by hardware inspection. Verification shall be considered successful when hardware inspection shows a door or cover must be opened to access the overload protective device.

4.3.12.9.1.3.2 EXTRACTOR –TYPE FUSE HOLDER

Verification that the arrangement of the extractor-type fuse holder operates such that the fuse is extracted when the cap is removed shall be by demonstration. Verification shall be considered successful when demonstrations show the fuse is extracted when the removable cap assembly is removed.

4.3.12.9.1.3.3 OVERLOAD PROTECTION LOCATION

Verification that overload protection (fuses and circuit breakers) intended to be manually replaced or physically reset on-orbit are located where they can be seen and replaced or reset without removing other components shall be by hardware inspection. Verification shall be considered successful when hardware inspection results show that overload protection devices are directly visible and accessible without removal of other components.

4.3.12.9.1.3.4 OVERLOAD PROTECTION IDENTIFICATION

Verification that each overload protector (fuse or circuit breaker), intended to be manually replaced or physically reset on-orbit, shall be readily identified or keyed (mechanically or color coded) for its rated value shall be by hardware inspection. Verification shall be considered successful when hardware inspection results show the rated identification for each overload protector is in place.

4.3.12.9.1.3.5 AUTOMATIC RESTART PROTECTION

Verification shall be by demonstration. The demonstration shall first induce an “Overload Initiated Shutdown”as defined in SSP 57000 Paragraph 3.2.2.6.1.1 and then observe system response to assure that Automatic Restart does not occur unless the Protection Switch/Control is explicitly operated to enable restarting. The verification of Automatic Restart Protection shall be considered successful when it shows that automatic restart cannot occur following an overload-initiated shutdown without explicit operation of the protection switch/control to enable restarting.

4.3.12.9.1.4 DELETED

4.3.12.9.1.4.1 DELETED

4.3.12.9.2 SHARP EDGES AND CORNERS PROTECTION

Verification that the hardware meets the sharp edges and corners requirements specified in NSTS 1700.7, ISS Addendum 222.1 shall be performed and submitted to the PSRP in accordance with NSTS 13830. Verification shall be considered successful when the hazard reports and safety data presented to the PSRP during the phased safety reviews are approved.

4.3.12.9.3 HOLES

An analysis shall be performed using data from drawings, integration documentation, and operational procedures to identify holes in IVA crewmember translation paths and maintenance worksites. A drawing inspection shall show that the proper hole sizes have been used or proper guards are in place. Verification shall be considered successful when analysis and inspection shows that all holes are of the proper size, covered, or guarded.

4.3.12.9.4 LATCHES

Verification shall be by inspection. The verification shall be considered successful when the inspection shows that all latches and similar devices have been properly covered, or guarded and designed to prevent entrapment of crew member appendages.

4.3.12.9.5 SCREWS AND BOLTS

Verification shall be by analysis and inspection. An analysis shall be performed using data from drawings, integration documentation, and operational procedures to identify screws and bolts which exceed the length specified in the requirements and the required use of guards or covers due to location in crewmember translation paths and maintenance worksites. A drawing inspection shall show that the required cover installation has been accomplished or proper guards are in place. Verification shall be considered successful when analysis and inspection shows that screws and bolts which exceed the specified length have been properly covered, or guarded.

4.3.12.9.6 SECURING PINS

An analysis of payload hardware and flight drawings shall be performed to verify requirement. The verification shall be considered successful when the analysis shows the requirement has been met.

4.3.12.9.7 LEVERS, CRANKS, HOOKS, AND CONTROLS

Verification shall be by analysis and inspection. The verification shall be considered successful when the inspection and analysis shows that all levers, cranks, hooks, and controls have been properly covered, or guarded and cannot pinch, snag, or cut, the crewmembers or their clothing.

4.3.12.9.8 BURRS

Verification shall be by inspection. The verification shall be considered successful when the inspection shows that all edges have been properly deburred.

4.3.12.9.9 LOCKING WIRES

A. An analysis of payload hardware and flight drawings shall be performed to verify requirement. The verification shall be considered successful when the analysis shows the requirement has been met.

B. An inspection of payload hardware or flight drawings shall be performed to verify compliance with the requirement. The verification shall be considered successful when the inspection shows the requirement has been met.

4.3.12.9.10 AUDIO DEVICES (DISPLAYS)

A. Verification that the audio devices and circuits protect against false alarm shall be by analysis. The verification shall be considered complete when analysis shows that protective measures have been taken.

B. Deleted.

C. Verification of circuit test devices or other means of operability testing shall be by demonstration. The requirement will be met when demonstration shows that the circuit test device correctly indicates when the audio device is working, and when it is not working.

D. Verification of the manual disable device shall be by analysis that determines whether any failure modes can result in sustained activation of the audio device. If no such failure mode exists, then further verification is not required. However, if analysis shows that there are failure modes that can result in sustained activation of the audio device, then demonstration of the manual disable mode shall be required. In that case, the requirement shall be considered successful when demonstration shows that the audio device can be manually turned off.

4.3.12.9.11 DELETED

4.3.12.9.12 EGRESS

Verification of this requirement shall be performed and submitted to the PSRP in accordance with NSTS 13830. Verification shall be considered successful when hazard reports and safety data presented to the PSRP during the phased safety reviews are approved.

4.3.12.10 PAYLOAD IN-FLIGHT MAINTENANCE

An analysis of payload hardware and flight drawings shall be performed to verify requirement. The verification shall be considered successful when the analysis shows the requirement has been met.

4.3.12.11 DELETED

(This Page Intentionally Left Blank)

APPENDIX A
ABBREVIATIONS AND ACRONYMS

AC	Alternating Current
AIT	Analysis and Integration Team
APM	Attached Pressurized Module
APS	Automated Payload Switch
ANCP	Acoustics Noise Control Plan
ARIS	Active Rack Isolation System
BPDU	Bitstream Protocol Data Unit
C	Centigrade
cc	cubic centimeters
cm	Centimeter
C&DH	Command & Data Handling
CCSDS	Consultative Committee for Space Data Systems
C&T	Communications & Tracking
C&W	Caution and Warning
CAM	Centrifuge Accommodations Module
COF	Columbus Orbiting Facility
COTS	Commercial Off The Shelf
CSMA/CD	Carrier Sense Multiple Access with Collision Detection
CVIU	Common Video Interface Unit
DEAP	Dryden Early Access Platform
dB	deciBel
dBs	deciBels
dBA	Acoustic Decibel Level

dBm	deciBels Referenced to One Milliwatt
dc	Direct Current
EEE	Electrical, Electronic, and Electromechanical
ELM-PS	Experiment Logistics Module – Pressurized Section
EMC CS–01, 02	Electromagnetic Compatibility; Conducted Susceptibility –01 (CS–01), (CS–01), Conducted Susceptibility –02 (CS–02)
EMI	Electromagnetic Interference
EPCE	Electrical Power Consuming Equipment
EPS	Electrical Power System
ESA	European Space Agency
ESD	Electrostatic Discharge
F	Fahrenheit
FHP	First Header Pointer
FSS	Fluid System Servicer
GFCI	Ground Fault Circuit Interrupter
GSE	Ground Support Equipment?
HRDL	High Rate Data Link
HRFM	High Rate Frame Multiplexer
hr	hour
Hz	Hertz
ICD	Interface Control Document
IDD	Interface Design Document
IEC	International Electro Technical Commission
IEEE	Institute of Electrical and Electronic Engineers
IRD	Interface Requirements Document
IRE	Institute of Radio Engineers

ISO	International Standards Organization
ISPR	International Standard Payload Rack
ISS	International Space Station
ITCS	Internal Thermal Control System
IVA	Intravehicular Activity
JEM	Japanese Experiment Module
kg	kilograms
kHz	kiloHertz
kPa	kiloPascal
KSC	Kennedy Space Center
kW	kiloWatt
LAN	Local Area Network
lbm	pounds mass
LED	Light Emitting Diode
LISN	Line Impedance Simulation Network
LLC	Logical Layer Control
LRDL	Low Rate Data Link
mA	milliAmperes
Mbps	MegaBytes per second
MDM	Multiplexer–Demultiplexer
MDP	Maximum Design Pressure
MIL–STD	Military Standard
MPLM	Mini Pressurized Logistics Module
MRB	Microgravity Rack Barrier
MRDL	Medium Rate Data Link (Ethernet)

MSFC	Marshall Space Flight Center
N	Newton
NASA	National Aeronautics and Space Administration
NASDA	National Space Development Agency of Japan
NRZI	Non Return to Zero Invent
NSTS	National Space Transportation System
NTSC	National Television Systems Committee
NVR	No Verification Required
ODS	Orbiter Docking System
ORU	Orbital Replacement Unit
PCM	Program Cost Management
PCS	Portable Computer System
PFE	Portable Fire Extinguisher
PFM	Pulse Frequency Modulation
PG	Product Group
PIA	Payload Interface Agreement
PIDS	Prime Item Development Specification
PIO	Program Integration Office
PIRN	Preliminary/Proposed Interface Revision Notice
PP	Pressurized Payloads
PRCU	Payload Rack Checkout Unit
psia	pounds per square inch absolute
PSRP	Payload Safety Review Panel
PUI	Program Unique Identifier
PUL	Portable Utility Light

QD	Quick Disconnect
R/FR	Refrigerator/Freezer
Rev	Revision
RHA	Rack Handling Adapter
RID	Rack Insertion Device
RMA	
RPC	Remote Power Controller
RPCM	Remote Power Control Mechanism
RPCS	Remote Power Controllers
RSC	
RT	Remote Terminal
RUP	Rack Utility Panels
scc	Standard Cubic Centimeter
sec	second
SEE	Single Event Effect
SI	International System of Units
SLPM	Standard Liter Per Minute
SMAC	Spacecraft Maximum Allowable Concentrations
SMC	
SPL	Sound Pressure Level
SPOE	Standard Payload Outfitting Equipment
SSCM	Space Station Change Memo
SSP	Space Station/Shuttle Program
SSQ	Space Station Qualified
TBC	To Be Confirmed

TBD	To Be Determined
TBE	Teledyne Brown Engineering
TBS	To Be Supplied
TBV	To be Verified
TCS	Thermal Control System
TM	Technical Memo
UIP	Utility Interface Panel
UOP	Utility Outlet Panel
USL	United States Laboratory
USOS	United States On–orbit Segment
VC–S	Visibly Clean – Sensitive
VES	Vacuum Exhaust System
VES/WGS	Vacuum Exhaust System and/or Waste Gas System
VRS	Vacuum Resource System
WG	Waste Gas
WGS	Waste Gas System

APPENDIX B
GLOSSARY OF TERMS

Access Port: Hole that allows penetration of the Portable Fire Extinguisher nozzle

Adjunct Active Portable Equipment: Equipment operated outside the rack required to support nominal payload operations (including any required GFE).

Acoustic Reference: All sound Pressure Levels in decibels are referenced to 20 micropascals.

Active Air Exchange: Forced convection between two volumes. For example, forced convection between a subrack payload the internal volume of an integrated rack, or forced convection between a subrack payload and the cabin air.

Alignment Marks: Are straight or curved lines of sufficient length and width to allow alignment, are applied to both mating parts, align when the parts are in the installation position, and are visible during alignment and attachment.

amu: One Atomic Mass Unit, equal to one–twelfth the mass of a carbon–12 atom, the average atomic mass is called the atomic weight.

Boss: Protruding hard–points for GSE attachment.

Brightness ratio: Defined as the ratio of the maximum light level on the work surface area to the minimum light level on the work surface area.

Catastrophic Hazard: Any hazard which causes loss of on-orbit life sustaining system function.

Common Mode Noise: Refer to SSP 30482

Continuous Noise Source: A significant noise source which exists for a cumulative total of eight hours or more in any 24-hour period is considered a continuous noise source.

Critical Hazard: Any hazard which may cause a non-disabling injury, severe occupational illness, loss of emergency procedures, or involves major damage to one of the following: the launch or servicing vehicle, manned base, an on-orbit life-sustaining function, a ground facility or any critical support facility.

Current Limiting: The current is limited to a specific level plus or minus a percentage for tolerance.

Detergent Wipes: Detergent–saturated tissues used for interior surfaces and window cleaning.

Disinfecting Wipes: Tissue saturated with a disinfecting cleansing agent or agents, for cleanup of biological spills and biologically contaminated surfaces.

Dry Wipes: Utility wipes used for compartment and equipment cleaning and spill clean–up.

Electromagnetic Compatibility (EMC): The capability of systems and all associated subsystems/equipment to perform within design limits without degradation due to the Electromagnetic Effect encountered during accomplishment of the assigned mission. The deliverable end item compatibility test is as described in paragraph 3.6.2 of SSP 30243.

Electromagnetic Interference (EMI): Any electromagnetic disturbance, phenomenon, signal, or emission (man–made or natural) which causes equipment performance outside of the equipment's design limits. Testing is as described in SSP 30237 and SSP 30238 as referenced by paragraph 3.2.4.4 of this IRD.

Emergency Condition: Toxic atmosphere, rapid cabin depressurization or fire.

EPCE: Equipment that consumes electrical power including battery powered equipment.

Fire Event: Localized or propagating combustion, pyrolysis, smoldering or other thermal degradation process characterized by the potentially hazardous release of energy, particulates, or gases.

GSE Plane: A reference plane that is defined by the front surface of the four rack GSE bosses.

Hazard: The presence of a potential risk situation caused by an unsafe act or condition.

Health and Status Data: Information originating at the payload and passed to the respective payload MDM that provides the crew and the ground confirmation of payload performance, operational state, resource consumption, and assurance that the payload is operating within the safety guidelines as defined by the Payload Safety Review Panel and the ISS Flight Rules. Some examples of payload health and status data are subsystem status (power, voltages, currents, temperatures, pressures, fluid flow velocities, warning indicators, error messages/codes, etc.),

digital communications system statistics (1553, Ethernet, and high rate system status, etc.), and video system status (camera and video recorder on/off indications, Synchronization indicators, etc.).

Integrated Rack: The ISPR and all other sub–rack equipment which operates within a rack.

Intermittent Noise Source: A significant noise source which exists for a cumulative total of less than eight hours in a 24-hour period is considered an intermittent noise source.

Line Impedance Stabilization Network: An electrical circuit, including resistance, capacitance, and inductance, used to simulate a specific electrical power bus.

Non–Normal: Pertaining to performance of the Electrical Power System outside the nominal design due to ISS system equipment failure, fault clearing, or overload conditions.

On–Orbit Momentary Protrusions: Payload obstructions which typically would protrude for a very short time or could be readily eliminated by the crew at any time. Momentary protrusions includes only the following: drawer/door/cover replacement or closure.

On–Orbit Permanent Protrusion: A payload hardware item which is not ever intended to be removed.

On–Orbit Protrusions for Keep Alive Payloads: A protrusion which supports and/or provides the uninterrupted resources necessary to run an experiment. On–orbit protrusions for Keep Alive Payloads includes only power/data cables and thermal hoses.

On–Orbit Semi–permanent Protrusion: A payload hardware item which is typically left in place but can be removed by the crew with hand operations or standard IVA tools.

Example: SIR and ISIS drawer handles, other equipment that does not interfere with crew restraints & mobility aids.

On–Orbit Temporary Protrusion: A payload item which is typically located in the aisle for experiment purposes only. These items should be returned to their stowed configuration when not being used.

Example: Front panel mounted equipment

Operate: Perform intended design functions given specified conditions.

Patient: A crewmember instrumented with electrical/electronic equipment.

Potential Fire Source: Any electrical, chemical, or other energy source capable of creating a fire event (e.g., electrically powered equipment).

Protrusion: A payload hardware item which extends beyond the GSE plane.

Reusable Wipes: Utility handwipes that can be impregnated or dampened with premixed evaporative detergent/biocidal solutions or with water.

Safety–Critical: Having the potential to be hazardous to the safety of hardware, software, and personnel.

Specularity: Defined as the ratio of the flux leaving a surface or medium by regular (specular) reflection to the incident flux.

Standard Conditions: Measured volumes of gases are generally recalculated to 0°C temperature and 760 mm Hg pressure, which have been arbitrarily chosen as standard conditions.

vented conditions: Condition (Temperature and Pressure) of the gas in the experiment chamber as the chamber is opened to the ISS VES/WGS.

VES/WGS: Vacuum Exhaust System and/or Waste Gas System. The USL, JEM and APM each have similar systems to vent gases to space from an experiment chamber. The System in the USL is the Vacuum Exhaust System and the Systems in the JEM and APM are the Waste Gas Systems.

Wire derating: Wire is derated based on the current flow, environment, electrical circuitry that operates within an integrated rack or within electrical power consuming equipment individual boxes.

APPENDIX C
INSTRUCTIONS FOR LABELS AND DECALS

C.1 INTRODUCTION

Appendix C provides the instructions for the approval of payload labels. The development of labels will be a joint process requiring the cooperative efforts of Flight Crew Support Division (FCSD) and the PD. The process for developing labels, from the beginning to the delivery of flight certified labels which have been approved by the FCSD, is documented in Figure C.1–1.

To understand the priorities of the instructions, the following definitions need to be applied throughout Appendix C.

Statements with “must” will be used for instructions which are required to be met for the FCSD to provide approval.

Statements with “should” will be used for instructions which are incorporated into the label unless adequate justification is provided to FCSD to warrant exempting the label instruction.

C.2 RESPONSIBILITIES

The PD is responsible for providing label drawings, label location drawings and information sufficient to enable FCSD to determine the instructions herein are met. The PD will coordinate with FCSD before submitting the label drawings for approval.

FCSD is responsible for reviewing all payloads labels, providing guidance to the PD and granting approval based on the instructions herein. FCSD is also responsible for performing a human engineering assessment of the labels and ensuring the labels are appropriate from a human engineering perspective, including commonality, standardization, and operations nomenclature. Upon receiving Form 733, FCSD has 10 working days for either assessing, approving, and verifying the labels or for providing redlines to the label drawings.

The PTR is responsible for resolving issues and disagreements between the PD and FCSD.

SSP 50005, International Space Station Flight Crew Integration Standard (NASA–STD–3000/T) was used as basis for the payload decal/labeling guidelines contained herein.

C.3 FCSD APPROVAL INSTRUCTIONS

FCSD will use the following instructions in reviewing and providing the approval of payload labels.

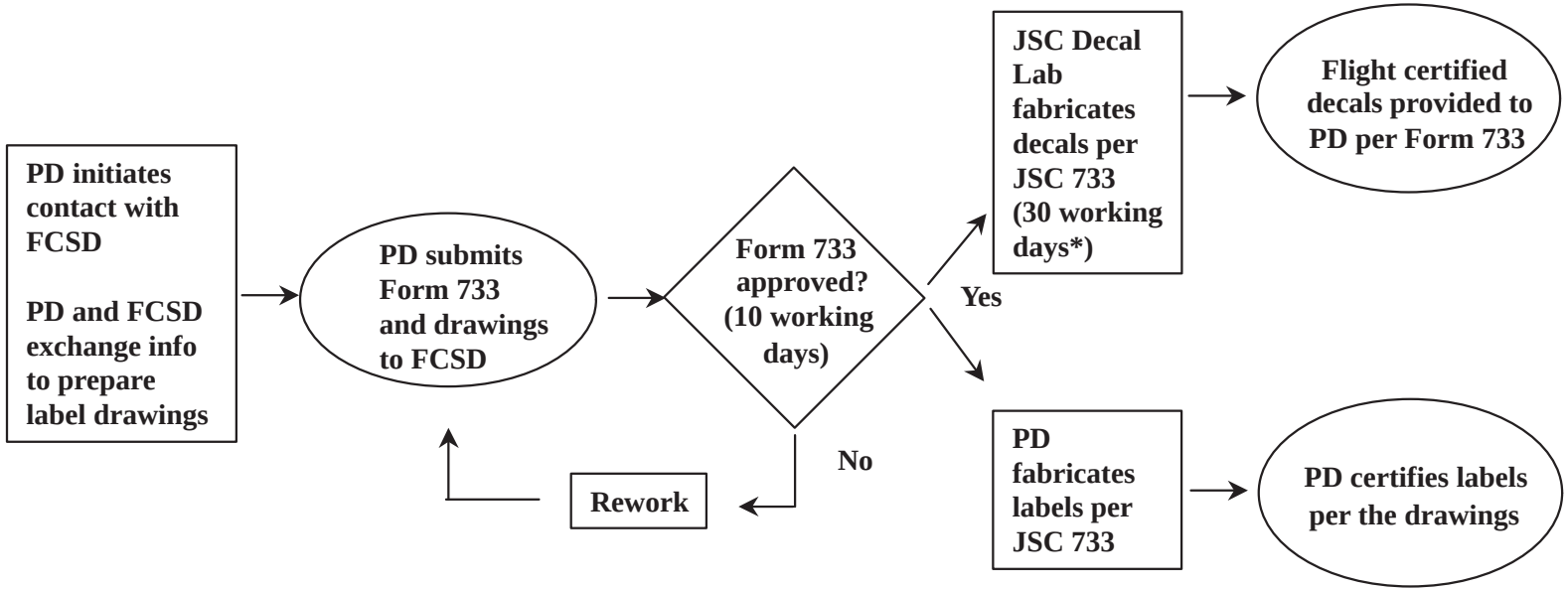

FIGURE C.1–1 LABEL PROCESS

*** Nominally 30 working days, unless notified otherwise**

C.3.1 GROUND ASSEMBLY AND HANDLING

Product marking for ground assembly and handling should be in accordance with MIL–STD–130, section 4, except paragraph 4.1.c.

C.3.2 FUNCTION CONSIDERATIONS

A. Decals and placards should contain information required by the user, the purpose, the function, and/or the functional result of the use of equipment items. Engineering characteristics or nomenclature may be described as a secondary consideration.

B. Instrument decals and placards, for example, should be labeled in terms of what is being measured or controlled. Calibration data may be included where applicable.

C.3.3 PAYLOAD ORIENTATION

A. Payload labeling, displays, and controls must have a consistent rack vertical orientation arrangement with the rack vertical axis origin at the bottom of the rack hinge point.

B. Payload labels required for operations with the rack(s) rotated should be oriented with respect to required crew positions.

C.3.4 DELETED (MOVED TO C.3.5.4.1)

C.3.5 LABELING DESIGN

C.3.5.1 LABELING STANDARDIZATION

A. Decals needed by the PD which are available in JSC 27260, Decal Process Document and Catalog must be obtained from the Decal Design & Production Facility (DDPF). Examples of labels found in the catalog are: IMS, PFE, toxicology, hazardous, caution and warning, rack power switch, fire indicators, etc. The DDPF is also available to the PDs for fabricating labels not found in JSC 27260.

B. Labeling should be standardized between and within systems.

C. Different labeling categories should be distinct from one another.

D. Nomenclature on labels must conform to the operational nomenclature provided in SSP 50254, Operations Nomenclature and JSC 36044.

E. Label Titles – The titles of equipment, displays, controls, switch positions, connectors, LEDs, stowage containers, etc., must be listed in upper case letters only. This includes abbreviations and acronyms. See Section C.3.5.6 for Operating Instructions labeling requirements.

(1) Title nomenclature must be consistent with procedural handbooks and checklists.

F. General To Specific Principle – More general, or important information should be placed above or to the left on a label(s). Increasingly more specific, or less important information should be placed lower or to the right, with the most specific, least important information on the bottom or furthest right.

G. Keypads – Non–COTS keypads on payloads should use mixed case (upper and lower case) letters.

C.3.5.2 READABILITY

A. Decals and placards should be as concise and direct as possible.

B. Abbreviations

(1) Deleted

(2) Periods should be omitted except when needed to preclude misinterpretation.

C. Decal and Placard Life

Payloads must provide labels that are readable for the duration of the payload's operation, which are replaceable.

D. Language

(1) Decals and placards must be written in the English language.

(2) If dual languages are used, English must be used first and with lettering at least 25% larger than the secondary language.

E. Decals and placards should be designed so as to minimize visual clutter.

F. Illumination – Labels and markings should be designed to be read at all general illumination levels and color characteristics of the illuminant as specified in Table 3.12.3.4–2.

G. Displays and Controls Title Selection

(1) Physical Hardware – When verbs are used to label physical hardware (buttons, switches, controls, etc.), the present tense should be used. For example: OPEN or CLOSE, BEGIN, or END, START or STOP, etc.

(2) Physical Hardware Linked to Software Displays – If physical hardware is linked to and/or represented by software displayed data or controls (i.e. LCD), the labels for the physical hardware and the software representation must use the same terminology.

C.3.5.3 LABEL PLACEMENT

A. All labels must be placed on the payload hardware in accordance to the label location drawings.

B. Payloads Operated From Rack Front Panels – Payloads operated from the front panel of racks must be labeled in accordance to Figure C.3.5.3–1.

(1) The rack IMS label must be located on the top left corner of the rack.

(2) The rack name label must be located to the right of the rack IMS label. The font size of this label should be the largest one for the entire rack. This label must spell out the name or the rack (acronym may follow in parentheses).

(3) The subrack IMS label must be located on the top left corner of the subrack drawer.

(4) The subrack name label must be located to the right of the subrack IMS label. The font size of this label should be smaller than the rack name label. If the subrack is in a rack containing multiple payload subracks (i.e. EXPRESS Rack), this name label must be spelled out (acronym may follow in parentheses). If this subrack is part of a

facility rack (i.e. FCF, HRF), this label can use the acronym for the entire rack. The specific subrack name should follow the rack acronym (i.e. HRF COOLING STOWAGE DRAWER).

(5) Subrack location codes must be placed on the inside of the rack post in accordance to Figure C.3.5.3–1.

C. Payloads Not Operated From Rack Front Panels – This category includes all self–contained payloads other than those controlled from front panels. Examples: SAMS II Remote Triaxial Sensor System, HRF Lower Body Negative Pressure Device, etc. See Figure C.3.5.3–2 for miscellaneous label placement examples.

(1) If the payload possesses a dominant face, or side, and space permits, the Payload Name label should be placed in the upper left corner or that face. This label must spell out the name of the rack (acronym may follow in parentheses). The IMS label should be placed to the right of the Payload Name label.

(2) If the payload does not possess a dominant face, the Payload Name and IMS labels should be placed in a prominent location, maintaining their respective left to right arrangement if possible.

(3) The font size of the Payload Name label should be the largest one for the payload.

D. Part Number and Serial Number Labels – Part Number and Serial Number labels should be placed together for ease of identification. The Part Number label should be arranged to the left or above the Serial Number label (general to specific principle). P/N and S/N are the standard representations of Part Number and Serial Number, respectively.

E. Loose Equipment – Payload Name labels for loose equipment should be placed on the left or at the top of the item. Acronyms may be used as long as the full name is spelled out on the label for main unit. The IMS label should be placed immediately to the right, or below the Payload Name label. In the case of very small equipment items, an IMS label with the equipment's name in the optional text portion is sufficient to satisfy both the IMS and Name label requirement.

F. Orientation – All markings and labels must be oriented with respect to the local worksite plane so that they read from left to right. Vertical orientation is permissible only when the marking or label dimensionally does not fit in the required location.

G. Label Position – Labels must be placed above connectors, switches, LEDs, displays, controls, etc. Labels may be placed in other locations only when they cannot dimensionally fit in the required location.

H. Visibility – Lables must be placed on equipment so that they are visible when the equipment is used or accessed. Markings should be located such that they are perpendicular to the operator's normal line of sight whenever feasible and should not be less than 45 degrees from the line of sight.

I. Overhead Panels – On overhead panels, markings and labeling must be oriented such that they appear upright when observed from local vertical.

J. Association Errors – The arrangement of markings on panels should protect against errors of association of one marking or set of markings with adjacent ones.

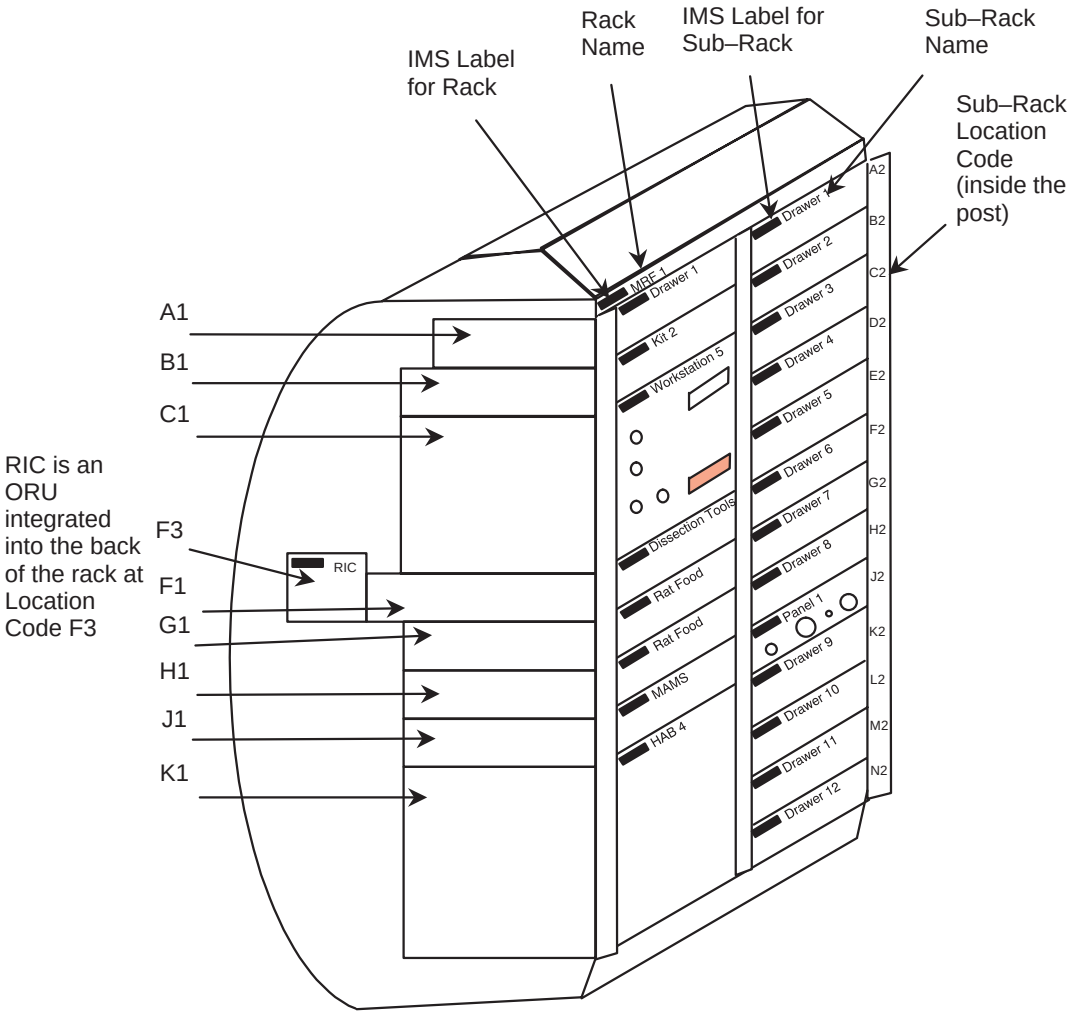

Rack IMS Label – located on the top left corner of the rack.

Rack Name – located to the right of the Rack IMS Label.

Sub–Rack IMS Label – Located on the top left corner of the sub–rack drawer.

Sub–Rack Labels – Located to the right of the Sub–Rack IMS Label.

Sub–Rack Location Codes – Located inside the rack post. Letters A thru N, excluding I, with even numbers on the right and odd on the left. These number are incremented as they are located interior to the rack (see the RIC).

FIGURE C.3.5.3–1 RACK LABEL PLACEMENT

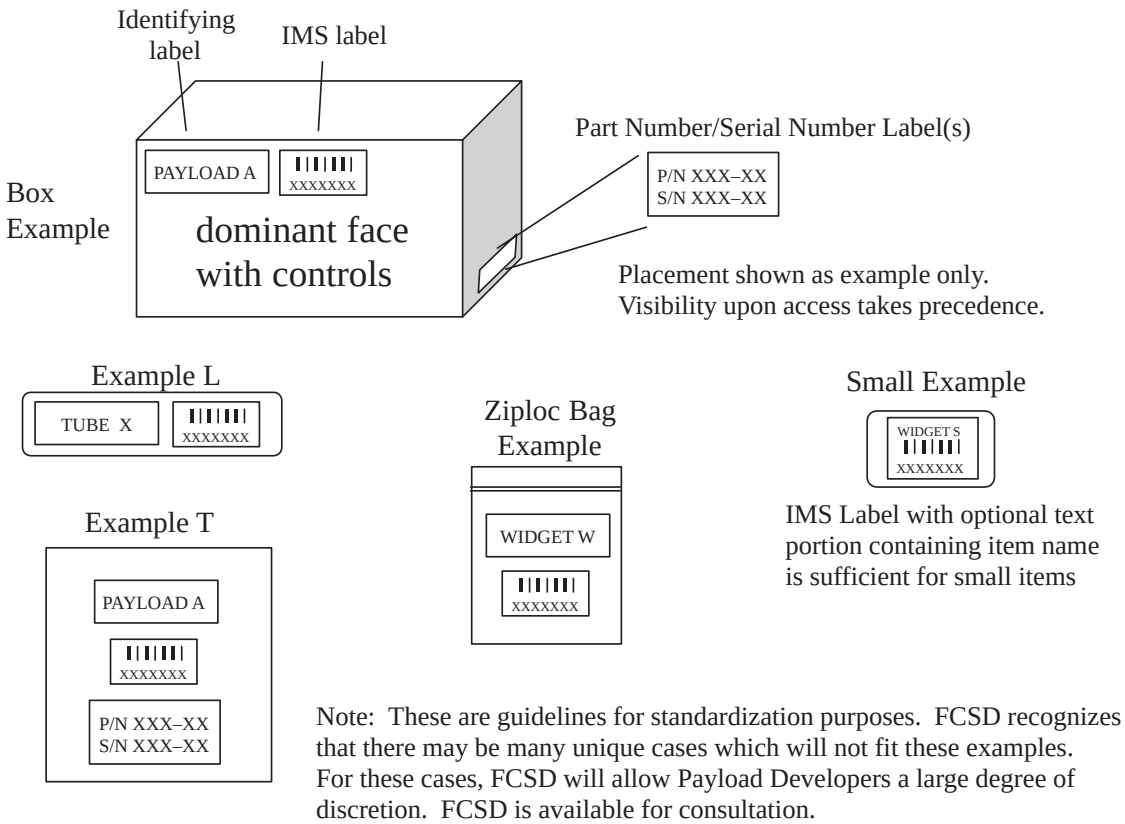

FIGURE C.3.5.3–2 MISCELLANEOUS LABEL PLACEMENT EXAMPLES

C.3.5.4 EQUIPMENT LABELING

C.3.5.4.1 EQUIPMENT INDENTIFICATION

A. All items on a payload must be identified with a label, including, but not limited to: displays, controls, switches, connectors, LEDs, containers, vents, etc., such that these items can be clearly referenced in crew procedures. Only those items whose use is obvious to the crew (e.g., food table, windows, etc.) are exempt from this instruction. The font size for these labels must be smaller than the main label naming the payload.

B. Containers must be labeled to identify their contents.

C. Loose equipment must be marked with nomenclature that describes the function of the item and its pertinent interfaces.

D. Multi–quantity Items

(1) Multi–quantity items that require individual distinction but are not serialized must be individually numbered.

(2) Serial Numbers – Multi–quantity items that are serialized should display the serial number as part of the identification.

(3) Containers containing multiple quantities of the same item should use a number in parentheses, after the name, to indicate the quantity (i.e. ”TEST TUBES (4)”, indicates there are four test tubes in the container).

C.3.5.4.2 EQUIPMENT CODING

C.3.5.4.2.1 UTILITY CODING

A. Pipes, electrical conduits, and hoses which are extensions to and from ISS vehicle utilities must comply with the utility coding requirements as specified in Section 3.2 of SSP 50014, ISS Utility Coding Specification.

B. Payload pipes, electrical cables, fluid and gas lines, and hoses which are contained entirely within a payload or payloads are not covered by SSP 50014, ISS Utillity Coding Specification. These items are defined as payload utilities. Payload utilities must meet the requirements of Section C.3.5.4.2.1.C (below).

C. Payload utilities must be labeled to indicate the equipment to which they belong and the connectors to which they mate. This includes items intended to be removed or connected on–orbit (excluding internal unplanned maintenance cables).

(1) Deleted

(2) Deleted

(3) Electrical Cables and Associated Hardware. The cable end plug (the movable, less fixed, connector of a mating pair) must be designated with a ”P” (i.e. P1). The connector on the hardware (the less movable, more fixed, connector of a mating pair) must be designated with a ”J” (i.e. J1) Cables which are permanent parts of assemblies (i.e. receptacle cables behind front panels) are exempt from the ”P” requirement. The plug number and receptacle number for a mating pair should be identical (i.e. P1 mates with J1), except for generic cables, which have multiple connection possibilities. See Figure C.3.5.4.2.1–1 for a cable labeling example.

(4) A payload utility line must contain a main identifying label with the information below, preferably arranged in vertical order. This label must be placed in the middle of the utility line, or at intervals not to exceed 1 meter for long utility lines. See Figure C.3.5.4.2.1–1 for a cable labeling example.

– The name of the piece of equipment to which the payload utility line belongs.

– The name of the payload utility line (optional).

– The Part Number of the payload utility line.

– The Serial Number of the payload utility line.

(5) A payload utility line must contain one (and only one) IMS label. It must be placed to the right of the main identifying label, as shown in Figure C.3.5.4.2.1–1. If the utility line requires multiple equipment name labels space at 1 meter intervals per #4, the IMS label must be placed at the center of the line.

(6) Labels at the terminal ends of a payload utility line must contain the information below. Vertical order is the preferred arrangement. When the circumference of the utility line is too small to accommodate a label that wraps around the line with text arranged vertically, a tag, or flag style label should be used. For cases where wear and tear of such flags is a concern (i.e. through frequent use), a horizontal arrangement of the information is allowed. See Figure C.3.5.4.2.1–1 for cable label examples.

– The name of this end of the payload utility line (i.e. for cables, P1).

– The word ”TO” followed by the name of the piece of equipment to which this end of the payload utility line connects to. If this end can attach to multiple connector ports (i.e. generic cables), this requirement is not necessary.

– The name of the receptacle that this end of the payload utility line connects to (i.e. for cables, J1). If this end can attach to multiple connector ports (i.e. generic cables), this requirement is not necessary.

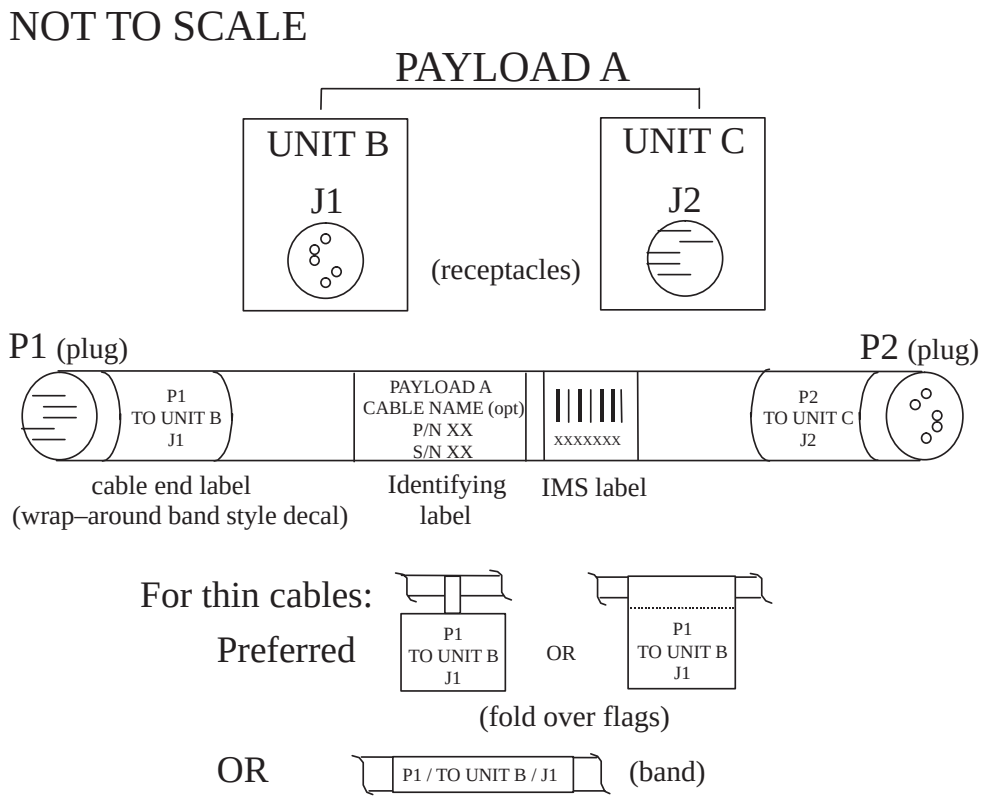

Note: ”P” designates cable end plugs and ”J” designates receptacles on hardware regardless of gender (pins/sockets)

FIGURE C.3.5.4.2.1–1 CABLE LABELING EXAMPLE

C.3.5.4.2.2 COLOR CODING

A. The colors red and yellow must only be used for Caution and Warning labels. See section C.3.5.9 for Caution & Warning labeling requirements.

B. Hazard Labels – Hazard labels have their own, unique coding scheme, of which color is one factor. See Section C.3.5.9.I for instructions.

C. Identification/Connectivity – Color coding used for component identification or to denote connectivity relationships must combine color with nomenclature (i.e. hardware name and the payload it belongs to, simple number, part number, etc.) such that when those components are referred to within procedures, it is clear which components the procedures are referring to. The only color restriction is listed in paragraph A (red and yellow cannot be used).

Color identification numbers used below are per FED–STD–595–B.

D. Color Difference

(1) Only one hue within a color category (e.g., reds, greens) should be used on the decals or placards within the same integrated rack.

(2) That color must always be associated with a single meaning within the same system or integrated rack.

E. Number of Colors – No more than 9 colors, including white and black, must be used in a coding system.

F. Placards – Placards should adhere to the accepted combinations of markings and background color listed below:

- Markings/Background
- White/Black
- Black/Yellow
- Black/White
- Yellow/Blue
- White/Red
- Red/White
- Blue/Yellow
- White/Grey

C.3.5.5 LOCATION AND ORIENTATION

C.3.5.5.1 LOCATION CODING

A. Access Panels - maintenance access panels must be labeled to assist the crew in locating the panel for maintenance activities.

(1) Access panel identification labels should be located in the lower left position on the panel with respect to the local vertical orientation.

C.3.5.5.2 ALIGNMENT MARKS/INTERFACE IDENTIFICATION

A. Orientation – When a piece of hardware requires a specific orientation which cannot be identified by alignment marks, arrows and/or labels should be used to indicate the proper orientation.

B. Visibility – Alignment marks, arrows, or other labels showing required orientation must be visible during alignment and attachment.

C. Tethered Equipment – Interface identification should not be used for movable items tethered to a mating part (e.g., dust cap for an electrical connector, hinged lid for a stowage container).

C.3.5.6 OPERATING INSTRUCTION

A. Location – Equipment operating instructions should be located on or adjacent to equipment.

B. Equipment Name – The instructions should have the title of the equipment to be operated centered above the text.

C. Grouping – Instructions should be grouped and titled by category (e.g., installation, removal, activation, calibration, etc.).

D. Title Selection – The titles of instructional text for equipment, displays, controls, switch positions, connectors, etc., must be in upper case letters only.

(1) Title nomenclature must be consistent with procedural handbooks and checklists.

E. Case – Instructional text below titles must use upper and lower case letters.

F. Required Tools – Instruction for removal of stowage items should list any tools required prior to the instructional text.

(1) When tools are required to remove stowage items, markings should be used for the location of the fasteners to be removed.

C.3.5.7 STOWAGE CONTAINER LABELING

This section applies to stowage containers provided within the payload, not general ISS stowage containers. See JSC 27260 for stowage decal formatting requirements.

A. Each stowage container should display the contents on its front surface visible to the crewmember.

B. Provisions must be made to permit in-flight revisions to or replacement of stowage labels on all stowage containers.

C. Subdivided Containers:

(1) If a stowage container is subdivided internally into smaller closed containers, the sub-containers must carry a list of contents.

(2) If the available marking space on a sub-container is insufficient to display the complete content titles, a contents list must be displayed elsewhere and clearly identified as belonging to the sub-container.

(3) The specific contents of each sub-container and its code must be listed on the front surface of its container or near it.

D. Individual–Crew Items – Items allocated to a specific crewmember should be identified on the listing with the user’s title, name, or other coding technique.

E. Similar Item Labeling – Containers with designated locations for placement of equipment set (e.g., socket wrenches in a tool kit) should have each location identified with the title of the item stowed.

C.3.5.8 GROUPED EQUIPMENT ITEMS

A. Functional groups of three or more equipment items (i.e. displays, controls, switch positions, connectors, LEDS, etc.) must be identified (e.g., by common color, by boundary lines). Functional groups of equipment items are all associated or connected with a common

system or purpose. (e.g., CABIN AIR, FURNACE A, EXPERIMENT “M”, PANEL LIGHTING). Two functionally related items should be grouped when such grouping provides clarification of purpose and/or distinquishes them from surrounding items. See Figure C.3.5.8–1 for grouping label examples.

B. Labels must be located above the functional groups they identify.

C. When a line is used to enclose a functional group and define its boundaries, the labels must be centered at the top of the group, in a break in the line. When it is not possible to center the text at the top, the text may be placed elsewhere along the perimeter of the boundary line, but local vertical orientation or the text must be maintained.

(1) The width of the line must not be greater than the stroke width of the letters.

(2) The line must form an enclosed rectangle, or box, with rounded corners. Deviations from the rectangular shape are allowed when dimensional restrictions preclude a perfect rectangle.

D. When displays and controls are used together in adjustments or activation tasks, visible labels or markings must indicate their functional relationships.

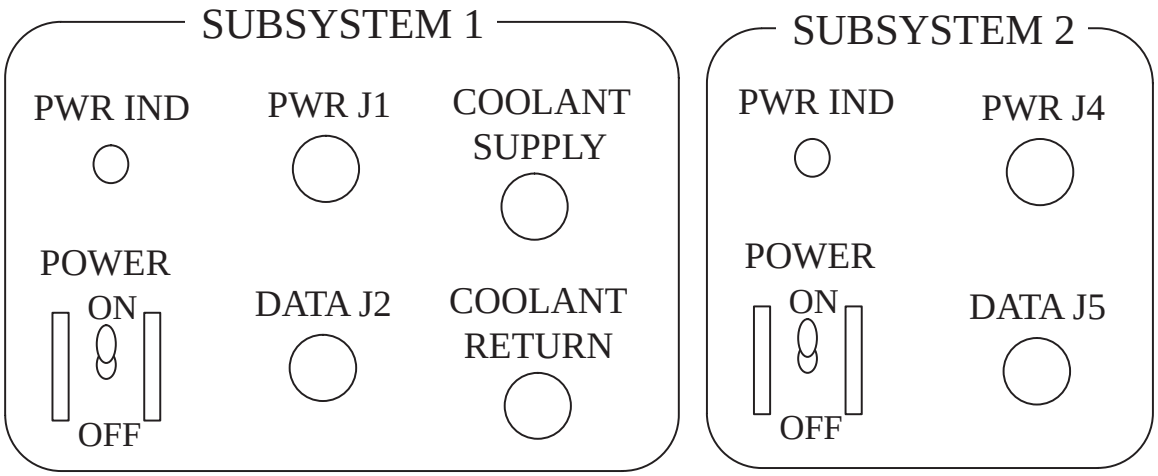

FIGURE C.3.5.8.–1 GROUPING LABEL EXAMPLES

C.3.5.9 CAUTION AND WARNING LABELS

Caution and warning labels are required for indicating potentially undesirable conditions.

A. Caution and warning labels must be standardized between and within systems.

B. Caution and warning labels must be distinct from one another.

C. Caution and warning labels must identify the type of hazard and the action that would prevent its occurrence.

D. The caution and warning markings must be located in a visible area.

E. Emergency-Use Items

(1) Decals and placards on emergency-use items (e.g., repair kits, emergency lighting, fire extinguisher, etc.) must display the words “EMERGENCY USE” surrounded by diagonal red and white stripes either on the item or adjacent to it.

(2) The emergency type warning stripes must be alternate red and white.

(3) The red and white stripes should be of equal width.

(4) There must be no fewer than four red stripes and three white stripes.

(5) The striping must be applied at a 45 degree angle rotated clockwise from the vertical.

(6) The striping must begin and end with a red stripe.

(7) The text must be white letters on the red background or red letters on a white background.

(8) For items located within a storage container, the diagonal striping must be applied to the door of the container and the titles of the emergency items must be included on the marking instead of the words EMERGENCY USE.

F. Warning Stripe Specification

(1) Caution/warning decals and placards must be surrounded by diagonal yellow and black stripes.

(2) The caution/warning type stripes must be alternate yellow and black.

(3) The yellow and black stripes should be of equal width.

(4) There must be no fewer than four yellow stripes and three black stripes.

(5) The striping must be applied at a 45 degree angle rotated clockwise from the vertical.

(6) The striping must begin and end with a yellow stripe.

(7) The text must be black letters on the yellow background.

G. Switches and Buttons

(1) The striping around a switch or button must not be wider than 25mm (1 in.) or narrower than 3 mm (0.125 in.).

(2) If one side of a switch or button has less than 3 mm (0.125 in.) space, no striping must be applied to that side.

H. Label Specifications - Hazard identification labels should use the letter size as specified in Figure C.3.5.9–1.

I. Hazard Labels

(1) Chemicals – The standard hazard class decals found in JSC 27260, Decal Process Document and Catalog, must be used to identify the proper hazard class of payload chemicals (i.e. chemicals in solid, liquid, or gaseous states). See NSTS 077000, Volume 14, Appendix 9, Section 5.6.3 for hazard class definitions. These decals use color coding (red, orange, yellow, blue, and green), as well as shape and textual content, in their design.

(2) Other standard hazard decals that are found in JSC 27260, Decal Process Document and Catalog that must be used include: biological hazard, radiation hazard, sharps hazard (to be added), and batteries (to be added).

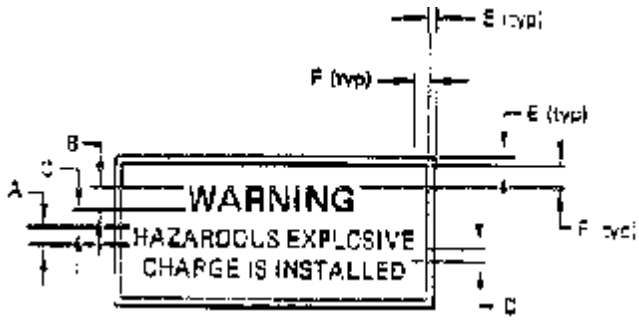

1/16 (typ) for labels
No radius for markings

A – Text or minor lines of lettering	= A
B – Heading or major line of lettering	= 1.25A to 2A
C – Spaceing between heading and text	= 0.65A to A
D – Spacing between lines of text	= 0.60A
E – Border width	= 0.60A
F – Background border	= A

C.3.5.9.1 HAZARD IDENTIFICATION LABEL LETTER SIZE

C.3.5.10 ALPHANUMERIC

C.3.5.10.1 FONT STYLE

A. The font style used on decals, placards, and labels must be Helvetica or Futura demibold. If there are fit problems:

– The use of condensed type (Helvetica Condensed) or abbreviations is the preferred method of solving line length.

or

– For engraved markings which are not able to exactly match the above required font, the engraved marking should match the Helvetica font as nearly as possible.

Note: Helvetica is the preferred font.

B. Stenciled Characters – Stencil–type characters should not be used on display/control panels or other equipment.

C.3.5.10.2 PUNCTUATION

A. Periods – Periods (.) should not be used in equipment labels.

B. Hyphens – Hyphens (–) should not be used in equipment labels, except in part and serial numbers.

C. Parentheses and Ampersands – In general, parentheses and ampersands should not be used on payload equipment. Parentheses may be used to enclose acronyms after spelled out names (See Section C.3.5.3) and to designate multiple quantities of an item (See Section C.3.5.4.1.D.3). Ampersands may be used where the substitution of backslashes (/) would remove or distort the intended meaning (i.e. PUSH & HOLD vs. PUSH/HOLD).

D. Slashes – The backslash (/) may be used in place of the words ”and” and ”or” and may be used to indicate multiple functions.

C.3.5.10.3 SPECIAL CHARACTER

A. Subscript and Superscript Size – Subscripts and superscripts should be 0.6 to 0.7 times the height of associated characters.

B. Subscripts – Numeric subscripts and upper case letter subscripts should be centered on the baseline of associated characters.

C. Lower Case Letter Subscripts –The base of lower case letters and the ovals of g, p, q, etc., should be at the same level as the base of adjacent capital letters.

D. Degree Symbol – The degree symbol should be centered on an imaginary line extended from the top of the F or C symbols.

E. Pound or Number Symbol (#) – The pound or number symbol should be centered on an imaginary line extended from the top of the associated numerals and placed two stroke widths away from them.

C.3.5.10.4 CHARACTER HEIGHT

A. Character Height – Character height depends on viewing distance and luminance level. At a viewing distance of 710 mm (28 in.), the height of letters and numerals should be within the range of values given in Table C.3.6.10.4–1.

B. Variable Distance – For a distance (D) other than 710 mm (28 in.), multiply the values in Table C.3.5.10.4–1 by D/710 mm (D/28 in.) to obtain the appropriate character height.

TABLE C.3.5.10.4–1 CHARACTER HEIGHT – 710 mm (28 in) VIEWING DISTANCE

Markings	Character Height	
	3.5 cd/m^2 (1ft–L) or below	Above 3.5 cd/m^2 (1ft–L)
For critical markings, with position variable (e.g., numerals on counters and settable or moving scales)	5–8 mm (0.20–0.31 in.)	3–5 mm (0.12–0.20 in.)
For critical markings, with position fixed (e.g., numerals on fixed scales, controls, and switch markings, or emergency instructions)	4–8 mm (0.16–0.31 in.)	2.5–5 mm (0.10–0.20 in.)
For noncritical markings (e.g., identification labels, routine instructions , or markings required only for familiarization)	1.3–5 mm (0.05–0.20 in.)	1.3–5 mm (0.05–0.20 in.)

C. Size Categories – Characters used in labeling should be graduated in size. To determine character height, all nomenclature on a label may be divided into three categories: titles, subtitles, and text. The nominal heights at a viewing distance of 710 mm (28 in.) for each category should be:

(1) Titles, 5 mm (0.19 in.)

(2) Subtitles, 4 mm (0.16 in.)

(3) Text, 3 mm (0.12 in.)

When more than one character size is used in labeling, there should be at least a 25 percent difference in the character height for each character set.

D. Space Limitations – The use of the same size letters and numerals for all categories on a label is acceptable for solving space limitation and clarity problems. The height of lettering and numerals should be not less than 3 mm (0.12 in.).

C.3.5.10.5 CHARACTER WIDTH

A. Letters – The width of letters should be 0.6 of the height, except for the letter ”I,” which should be one stroke in width, the letters ”J” and ”L”, which should be 0.5 of the height, the letter ”M”, which should be 0.7 of the height, and the letter ”W,” which should be 0.8 of the height.

B. Numerals – The width of numerals should be 0.6 of the height, except for the numeral ”4”, which should be one stroke width wider and the numeral ”1”, which should be one stroke in width.

C. Wide Characters – When wider characters are used on a curved surface, the basic height–to–width ratio should be increased to 1:1.

C.3.5.10.6 STROKE WIDTH

A. Height–to–Stroke Ratio – Marking letters and numerals should have a height–to–stroke ratio of 5:1 to 8:1.

B. Transillumination Background – Opaque markings on a transilluminated lighted background should have a height–to–stroke ratio of 5:1 to 6:1.

C. Transilluminated Markings – Transilluminated markings on a dark background or markings used on integrally lighted instruments should have a height–to–stroke ratio of 7:1 to 8:1.

D. General Purpose Illumination – Characters used on display panels and equipment when viewed under general purpose flood lighting or normal display conditions as specified in Table 3.12.3.4–2 should have a height–to–stroke ratio of 6:1 to 7:1.

C.3.5.10.7 CHARACTER MEASUREMENT

A. Measurement – All letters and numeral measurement should be made from the outside edges of the stroke lines for other than machine engraving on opaque surfaces.

B. Engravings – For all mechanical engraving on opaque surfaces, the dimensions controlling the size of letters and numerals should be measured from centerline to centerline of the stroke.

C.3.5.10.8 SPACE

A. Character Spacing – The spacing between letters within words and between digits in a multi–digit number should be the equivalent of one stroke width between two straight–sided letters such as H and l. (This instruction intended to accommodate the normal commercial typographical practice of spacing letters to achieve a, consistent visual continuity. This permits close spacing of open letters such as C and T to avoid large apparent gaps.)

B. Word Spacing – The spacing between words should be the equivalent of the letter W between two straight–sided letters such as N and F.

C. Line Spacing

(1) The spacing between lines of related text should be 0.5 of upper case letter height.

(2) Spacing between headings and text should be 0.6 to 1.0 of upper case letter height.

C.3.5.11 BAR CODING

FCSD will instruct PDs to coordinate with NASA/JSC organization OC2 for IMS label registration.

A. Racks, subracks, stowage trays, loose equipment, consumables, and ORUs must have an inventory management label in accordance with SSP 50007.

B. Decals, labels, or placards using bar coding for identification must use a code 39 bar code number system per MIL-STD-1189, and SSP 50007.

C. Deleted.

C.3.6 DELETED (INCORPORATED INTO C.3.5.4.2.2)

C.3.7 SCALE MARKING

A. Accuracy

(1) The precision of scale marking should be equal to or less than the precision of the input signal.

(2) In general, scales that are to be read quantitatively to the nearest graduation mark should be designed so that interpolation between graduation marks is not necessary. Interpolation should be limited to one half the distance between minor graduation marks.

B. Interval Values

(1) The graduation intervals should progress by 1, 5, or 2 units of decimal multiples thereof, in that order of preference.

(2) The number of graduation marks between numbered graduation marks should not exceed 9.

C. Scale Markings (High Luminance – above 1 ft–L)

(1) The minimum width of major, intermediate, and minor marks should be 0.32 mm (0.0125 in.)

(2) The length of major, intermediate, and minor graduation marks should be at least 5.6 mm, 4.1 mm, and 2.5 mm (0.22, 0.16, and 0.09 in.), respectively.

(3) The minimum distance between major graduation marks should be 13 mm (0.5 in.).

(4) Minor graduation marks may be spaced as close as 0.89 mm (0.035 in.), but the distance should be at least twice the stroke width for white marks on black dial faces and at least one stroke width for black marks on white dial faces.

D. Scale Markings (Low Luminance – below 1 ft–L)

(1) The minimum width of a major graduation should be 0.89 mm (0.035 in.), the minimum width of an intermediate graduation should be 0.76 mm (0.030 in.), and the minimum width of a mirror graduation should be 0.64 mm (0.025 in.).

(2) The length of major, intermediate, and minor graduation marks should be at least 5.6 mm, 4.1 mm, and 2.5 mm (0.22, 0.16, and 0.10 in.), respectively.

(3) The minimum distance between major graduation marks should be 16.5 mm (0.65 in.).

(4) Graduation marks should be spaced a minimum of 1.5 mm (0.06 in.) between centerlines.

APPENDIX D
EXHAUST GASES COMPATIBLE WITH THE ISS VES/WGS WETTED MATERIALS

Data listed in this appendix document gases that have been verified as acceptable to vent to the ISS VES/WGS for compatibility with the systems wetted materials, as required according to 3.6.1.5 A. Gases listed in this appendix are required according to 3.6.1.5 A. Gases listed in this appendix are required to meet all other requirements relating to venting, this appendix does not show verification with any of the other exhaust gas requirement. This appendix will be updated to reflect stage analyses, adding new gases to this appendix as they are analyzed.

TABLE D1 EXHAUST GASES COMPATIBLE WITH THE USL VES WETTED MATERIALS

Gas	Max Concentration	Additional Constraint
Nitrogen	100%	
Cabin Air	100%	
Noble Gases	100%	
Carbon Dioxide	100%	
Carbon Monoxide	100%	
Oxygen	(not more than 30% by volume within the experiment chamber)	
Hydrogen		
Methane		
Sulfur Hexafluoride	100%	
Mixtures of these gases		Note 2
NOTE 1: Vented cabin air will contain small percentages of additional gases at up to the maximum levels defined in SSP 41000, Table IX, spacecraft Maximum Allowable Concentrations (SMAC), and NHB 8060.1B, Appendix D. Cabin air particulates are limited to levels identified in SSP 41000, paragraph 3.2.1.1.1.15, capability: control INternal Carbon Dioxide and Contaminants.		
NOTE 2: Combinations of all gases must be analyzed and are constrained as specified to paragraph 3.6.1.5, this table only represents the gases that are compatible with the USL VES wetted materials.		

TABLE D2 EXHAUST GASES NOT COMPATIBLE WITH THE USL VES WETTED MATERIALS

Gas	Notes
No gases identified to date	

TABLE D3 EXHAUST GASES COMPATIBLE WITH THE JEM WASTE GAS SYSTEM WETTED MATERIALS (TBR #8)

GAS	Max Concentration	Additional Constraint
Nitrogen	100%	
Cabin Air	100%	
Noble Gases	100%	
Carbon Dioxide	100%	
Carbon Monoxide	not more than 0.08% by volume	
Oxygen	not more than 30% by volume	
Hydrogen		
Methane		
Sulfur Hexafluoride		
Mixtures of these gases		
Trace Gas Contaminants	Less than the higher of 5 ppm or the SMAC value	
NOTE 1: Vented cabin air will contain small percentages of additional gases at up to the maximum levels defined in SSP 41000, Table IX, Spacecraft Maximum Allowable Concentrations (SMAC), and NHB 8060.1B, Appendix D. Cabin air particulates are limited to levels identified in SSP 41000, paragraph 3.2.1.1.1.15, Capability: Control Internal Carbon Dioxide and Contaminants.		
NOTE 2: Combinations of all gases must be analyzed and are constrained as specified to paragraph 3.6.1.5, this table only represents the gases that are compatible with the JEM WG wetted materials.		

TABLE D4 EXHAUST GASES NOT COMPATIBLE WITH THE JEM WASTE GAS SYSTEM WETTED MATERIALS

Gas	Notes
No gases identified to date	

TABLE D5 EXHAUST GASES COMPATIBLE WITH THE APM WASTE GAS SYSTEM WETTED MATERIALS

GAS	Max Concentration	Additional Constraint
List not completed to date		
NOTE 1: Vented cabin air will contain small percentages of additional gases at up to the maximum levels defined in SSP 41000, Table IX, Spacecraft Maximum Allowable Concentrations (SMAC), and NHB 8060.1B, Appendix D. Cabin air particulates are limited to levels identified in SSP 41000, paragraph 3.2.1.1.1.15, Capability: Control Internal Carbon Dioxide and Contaminants.		
NOTE 2: Combinations of all gases must be analyzed and are constrained as specified to paragraph 3.6.1.5, this table only represents the gases that are compatible with the APM WG wetted materials.		

TABLE D6 EXHAUST GASES NOT COMPATIBLE WITH THE APM WASTE GAS SYSTEM WETTED MATERIALS

Gas	Notes
No gases identified to date	

(This Page Intentionally Left Blank)

APPENDIX E
EXCEPTIONS AND OPEN ITEMS

E.1 TO BE DETERMINED ITEMS

TABLE E–1 TO BE DETERMINED ITEMS

TBD No.	Description	Document Section	Page No.	Responsible	Due Date
1	Quasi–Steady Requirements	3.1.2.1.A	3 – 20		
2	Quasi–Steady Requirements	3.1.2.1.B	3 – 20		
3	Vibratory Requirements	3.1.2.2.A	3 – 20		
4	Vibratory Requirements	3.1.2.2.B	3 – 20		
5	Transient Requirements	3.1.2.3.A	3 – 21		
6	Transient Requirements	3.1.2.3.B	3 – 21		
7	JEM Maximum Reverse Energy/Current	Table 3.2.2.5–1	3 – 30		
8	ESA Maximum Reverse Energy/Current	Table 3.2.2.5–1	3 – 30		
9	Remote Terminal Hardwired Address Coding – CAM	3.3.5.2.1.4–1	3 – 58		
10	NTSC Electrical Video Characteristics	3.4.1.3.1	3 – 76		
11	Quasi–Steady Requirements	4.3.1.2.1.A	4 – 9		
12	Quasi–Steady Requirements	4.3.1.2.1.B	4 – 9		
13	Vibratory Requirements	4.3.1.2.2.A	4 – 9		
14	Vibratory Requirements	4.3.1.2.2.B	4 – 9		
15	Transient Requirements	4.3.1.2.3.A	4 – 9		
16	Transient Requirements	4.3.1.2.3.B	4 – 9		
17	NTSC Electrical Video Characteristics	4.3.4.1.3.1	4 – 57		

E.2 TO BE RESOLVED ITEMS

TABLE E–2 TO BE RESOLVED ITEMS
(Page 1 of 2)

TBR #	Description	Document Section	Page No.	Responsible	Due Date
1	1. Average surface temperatures for payloads in the APM is specified not to exceed 35 degrees C on the front panels according to CPAH, Appendix C, paragraph 3.4.1. Increasing the average maximum front panel temperature to 37 degrees C could cause the radiative sink temperature to exceed the required maximum limit of 35 degrees C for adjacent payload racks. This violates the boundary conditions for ISPR internal thermal design and verification as per the ISPR ICD. 2. The specified maximum local temperature of 49 degrees C lacks detail with regard to labeling and other protections for the crew which are included in the CPAH. This also imposes unnecessary temperature limits to inaccessible surfaces. There is also an apparent disagreement in touch temperature requirements between human factors documentation and NSTS 1770.7B ISS Addendum. 3. The CPAH requirements are written to ensure payload compatibility with the APM. SSP 57000 requirements should be in accordance with the CPAH to ensure NASA payload compatibility with the APM.	3.5.1.11	3 – 80	NASA/Boeing	8/30/99
2	ESA requires additional time to assess this requirement to determine if there are impacts to the MSG design.	3.6.1.5.C	3 – 82	ESA/McGrath	7/14/99
3	ESA requires additional time to assess this requirement to determine if there are impacts to the MSG design.	3.6.1.5.D	3 – 82	ESA/McGrath	7/14/99
4	Thermal Conditions – APM module wall temperature	3.9.4–1	3 – 92	ESA/McGrath	7/14/99
5	Thermal Conditions – CAM module wall temperature	3.9.4–1	3 – 92	NASDA/Yui	
6	NASDA requires additional time to evaluate this requirement before they can concur.	4.3.2.4.8	4 – 26	NASDA/Yui	7/14/99

TABLE E–2 TO BE RESOLVED ITEMS

(Page 2 of 2)

TBR #	Description	Document Section	Page No.	Responsible	Due Date
7	ESA and NASDA require additional time to assess the verification methodology defined in this requirement before they can concur with this section.	4.3.6.1.5.B	4 – 63	NASDA/Yui ESA/McGrath	7/14/99
8	NASDA is to confirm accuracy of Appendix D3 ”Exhaust Gases Compatible with the JEM Waste Gas System Wetted Materials”.	D2	D – 2	NASDA/Yui	8/30/99

(This Page Intentionally Left Blank)